SANITARY SEWER EXTENSION PLANS
for

WALTON POND

LAND LOTS 156 & 184 – 4TH DISTRICT
CITY OF LOGANVILLE
WALTON COUNTY, GEORGIA
DISTURBED AREA: 5.29 ACRES

OWNER / DEVELOPER:

NEW HORIZON PARTNERSHIP LLC
2857 BRIDGEVIEW DRIVE
GAINESVILLE, GEORGIA 30507
PHONE: (678) 410–1569
CONTACT: MR. DAVID DERUSHA

ENGINEER:

Patton – Boyer, Inc.
LAND SURVEYORS & CIVIL ENGINEERS
909 ATLANTA HWY
GAINESVILLE, GEORGIA 30504
PHONE: (770) 532 - 6492
CONTACT: PAUL S. BOYER, PE

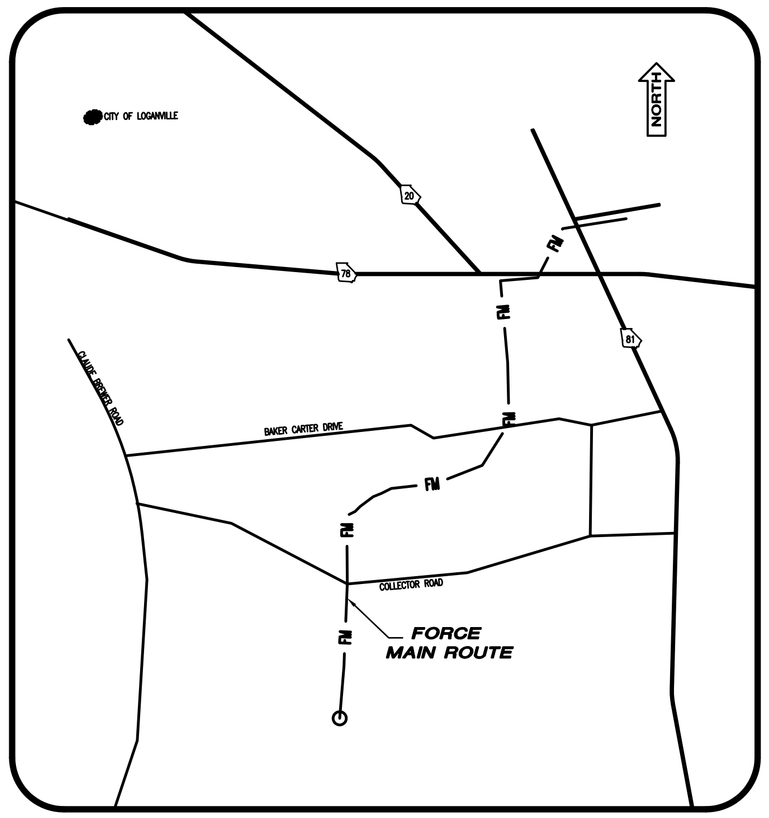

LOCATION MAP

INDEX TO DRAWINGS

COVER SHEET	C1
OVERALL SITE PLAN	C2
SANITARY SEWER PLAN AND PROFILE	C3-C7
FORCE MAIN PLAN AND PROFILE	C8-C13
PUMP STATION SITE PLAN	C14
EROSION CONTROL PLAN	C15-C17
SOIL MAP	C18
UTILITY DETAILS	C19-C20
PUMP STATION DETAILS	C21
EROSION CONTROL DETAILS	C22
ELECTRICAL DETAILS	E1-E4

DECEMBER 28, 2006
REVISED 2/15/07
REVISED 4/25/07
REVISED 10/15/07

GEORGIA REGISTERED No. 18702 PROFESSIONAL ENGINEER PAUL S. BOYER

IN EVENT OF EMERGENCY, CONTACT DAVID DERUSHA @ (678) 410-1569

THE INSTALLATION OF EROSION CONTROL MEASURES AND PRACTICES SHALL TAKE PLACE PRIOR TO LAND DISTURBING ACTIVITIES

03–243.09

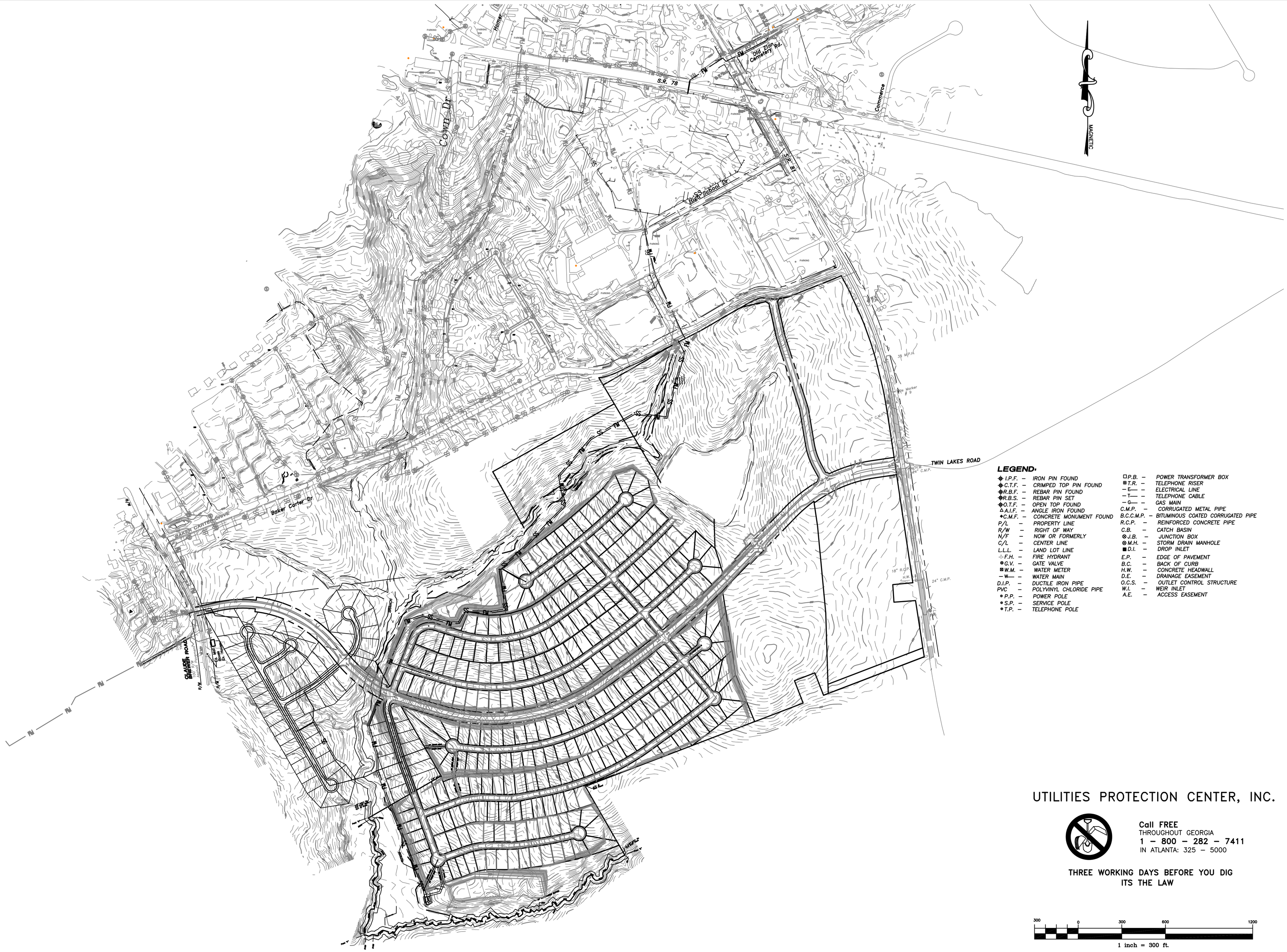

REVISIONS

No.	DATE	REMARKS
1.	2/15	REVISE ROUTE/ ADD UTILITIES
2.	4/25	PER COMMENTS
3.	10/15	PER COMMENTS

SEAL

GEORGIA REGISTERED No. 18702 PROFESSIONAL ENGINEER PAUL S. BOYER

THIS DRAWING, AS AN INSTRUMENT OF SERVICE, IS AND SHALL REMAIN THE PROPERTY OF THE ENGINEER AND SHALL NOT BE REPRODUCED, PUBLISHED, OR USED IN ANY WAY WITHOUT THE PERMISSION OF THE ENGINEER.

THE CONTRACTOR SHALL VERIFY ALL DIMENSIONS AND EXISTING CONDITIONS AT THE SITE BEFORE PROCEEDING WITH EACH PHASE OF THE WORK.

Patton-Boyer, Inc.
LAND SURVEYORS & CIVIL ENGINEERS
909 ATLANTA HWY
GAINESVILLE, GEORGIA 30501
PHONE (770) 532 – 1492
FAX (770) 532 – 1992

OVERALL SITE PLAN
FOR
WALTON POND PUMP STATION
LAND LOTS 156 & 184 ~ 4th LAND DISTRICT
CITY OF LOGANVILLE ~ WALTON COUNTY, GEORGIA

SHEET NUMBER
C2 22
OF

SCALE
1" = 300'

DATE
12/28/06

PROJECT NO.
03–243.09

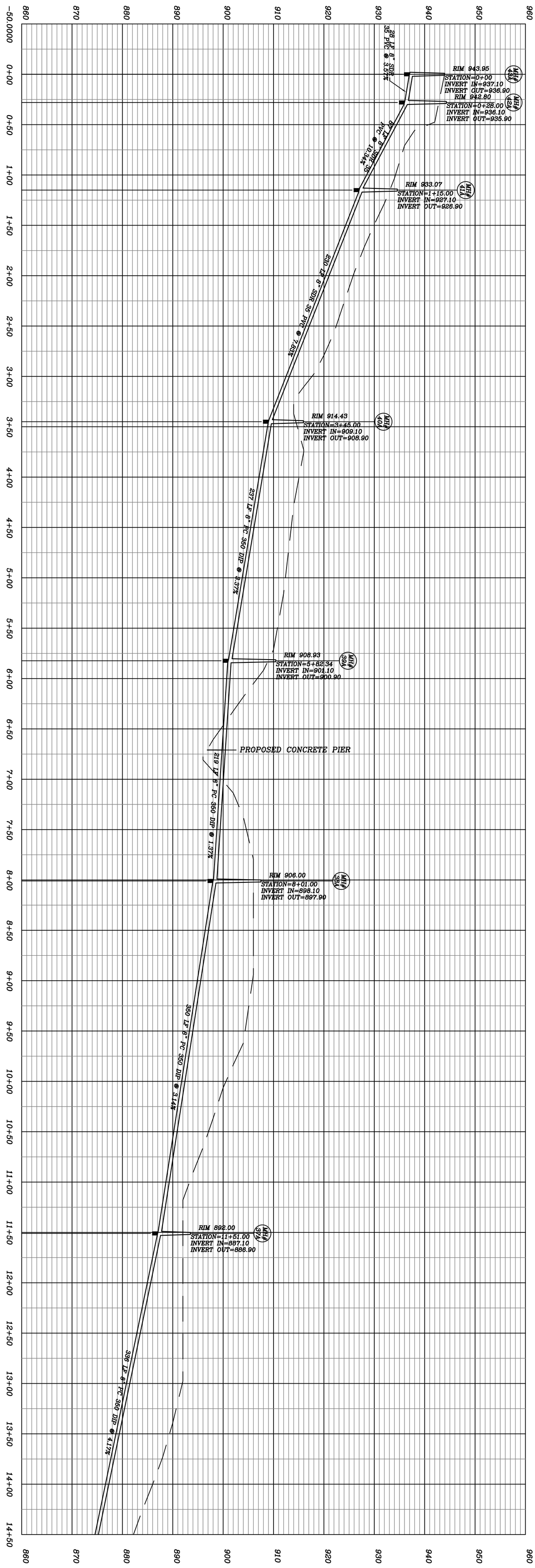

GRAVITY SEWER PLAN AND PROFILES
FOR
WALTON POND PUMP STATION
LAND LOTS 156 & 184 ~ 4th LAND DISTRICT
CITY OF LOGANVILLE WALTON COUNTY, GEORGIA

SHEET NUMBER C3 22 OF

SCALE 1" = 50'

DATE 12/28/06

PROJECT NO. 03-243.09

Patton - Boyer, Inc.
LAND SURVEYORS & CIVIL ENGINEERS
909 ATLANTA HWY
GAINESVILLE, GEORGIA 30501
PHONE (770) 532 - 6492
FAX (770) 532 - 1995

THIS DRAWING, AS AN INSTRUMENT OF SERVICE, IS AND SHALL REMAIN THE PROPERTY OF THE ENGINEER AND SHALL NOT BE REPRODUCED, PUBLISHED OR USED IN ANY WAY WITHOUT THE PERMISSION OF THE ENGINEER.

THE CONTRACTOR SHALL VERIFY ALL DIMENSIONS AND EXISTING CONDITIONS AT THE SITE BEFORE PROCEEDING WITH EACH PHASE OF THE WORK.

SEAL
GEORGIA REGISTERED No. 18702 PROFESSIONAL ENGINEER JULIE S. BOYER

REVISIONS		
No.	DATE	REMARKS
1.	2/15	REVISE ROUTE/ ADD UTILITIES
2.	4/25	PER COMMENTS
3.	10/15	PER COMMENTS

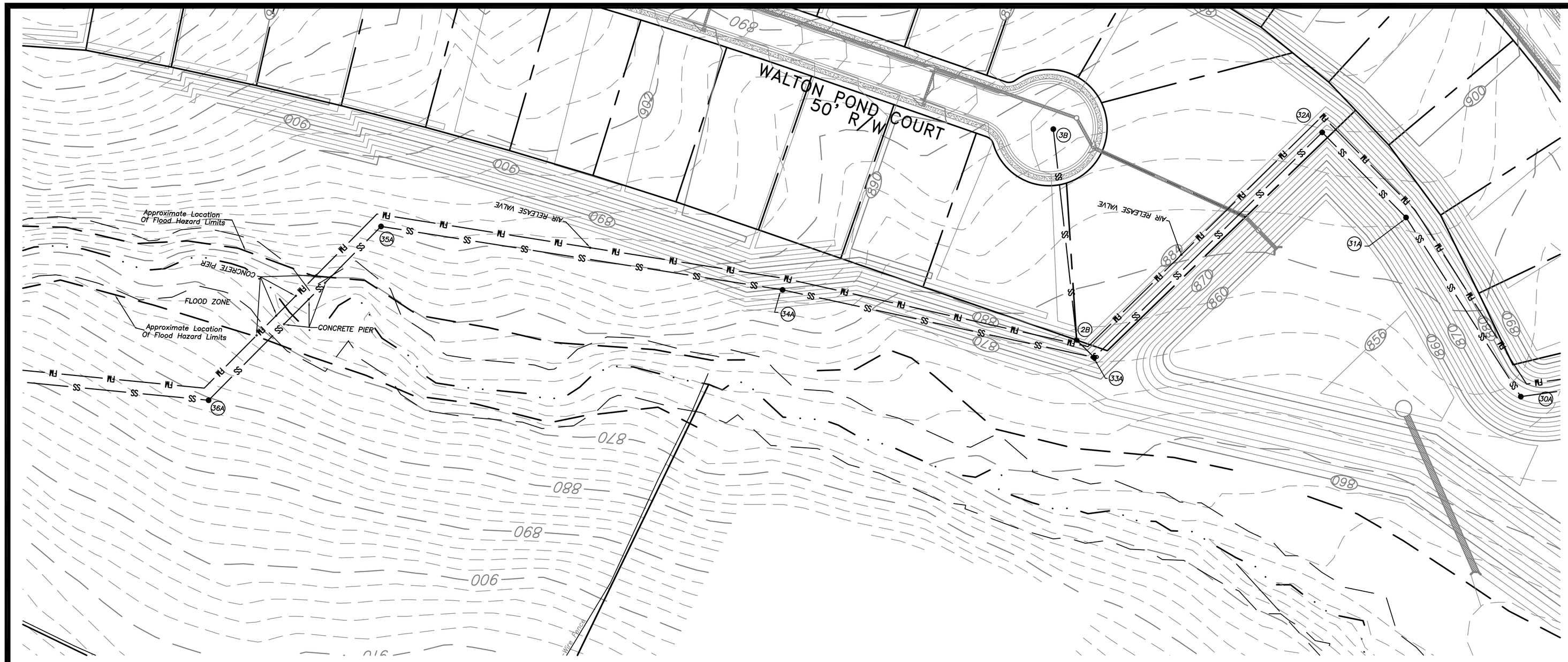

UTILITIES PROTECTION CENTER, INC.

Call FREE
THROUGHOUT GEORGIA
1 – 800 – 282 – 7411
IN ATLANTA: 325 – 5000

THREE WORKING DAYS BEFORE YOU DIG
ITS THE LAW

1 inch = 50 ft.

REVISIONS

No.	DATE	REMARKS
1.	2/15	REVISE ROUTE/ ADD UTILITIES
2.	4/25	PER COMMENTS
3.	6/18	REVISED INVERTS 33A–26A
3.	10/15	PER COMMENTS

SEAL

GEORGIA REGISTERED No. 18702 PROFESSIONAL ENGINEER PAUL S. BOYER

THIS DRAWING, AS AN INSTRUMENT OF SERVICE, IS AND SHALL REMAIN THE PROPERTY OF THE ENGINEER AND SHALL NOT BE REPRODUCED, PUBLISHED, OR USED IN ANY WAY WITHOUT THE PERMISSION OF THE ENGINEER.

THE CONTRACTOR SHALL VERIFY ALL DIMENSIONS AND EXISTING CONDITIONS AT THE SITE BEFORE PROCEEDING WITH EACH PHASE OF THE WORK.

Patton-Boyer, Inc.
LAND SURVEYORS & CIVIL ENGINEERS
909 ATLANTA HWY
GAINESVILLE, GEORGIA 30501
PHONE (770) 532 – 1492
FAX (770) 532 – 1992

GRAVITY SEWER PLAN AND PROFILES
FOR
WALTON POND
PUMP STATION
LAND LOTS 156 & 184 ~ 4th LAND DISTRICT
CITY OF LOGANVILLE WALTON COUNTY, GEORGIA

SHEET NUMBER
C4 22
OF

SCALE
1" = 50'

DATE
12/28/06

PROJECT NO.
03–243.09

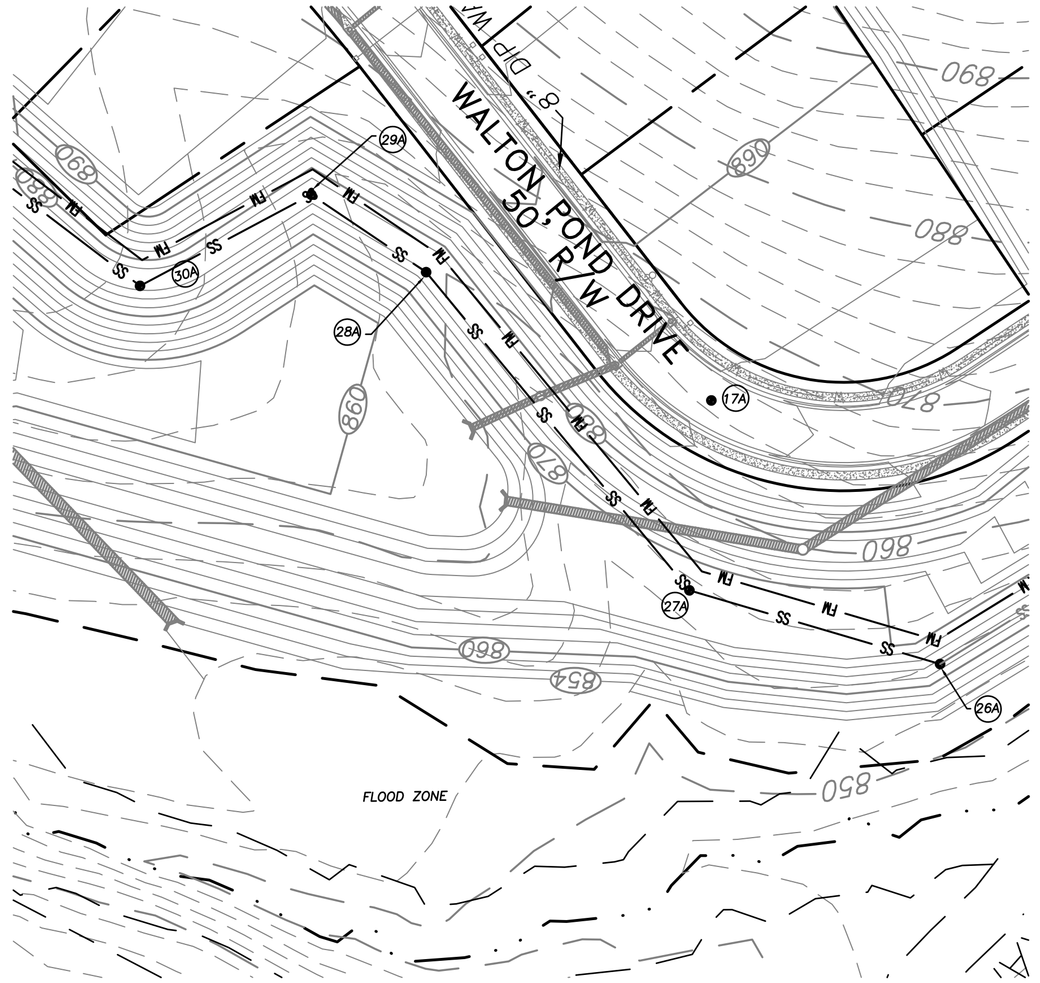

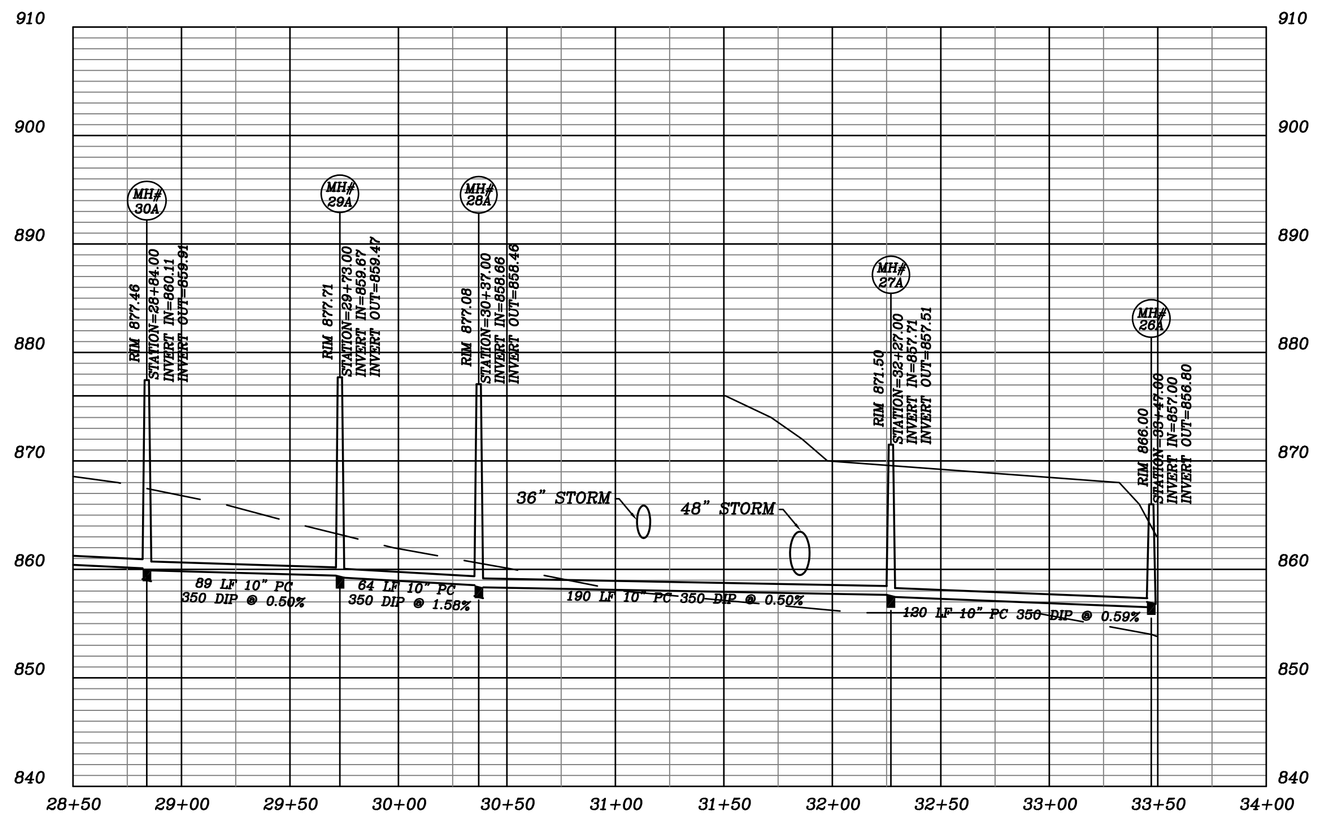

UTILITIES PROTECTION CENTER, INC.

Call FREE
THROUGHOUT GEORGIA
1 – 800 – 282 – 7411
IN ATLANTA: 325 – 5000

THREE WORKING DAYS BEFORE YOU DIG
ITS THE LAW

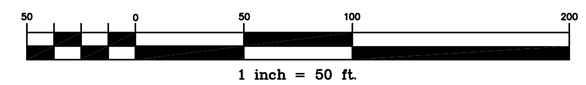

MAGNETIC

REVISIONS

No.	DATE	REMARKS
1.	2/15	REVISE ROUTE/ ADD UTILITIES
2.	4/25	PER COMMENTS
3.	6/18	REVISED INVERTS 33A–26A
4.	10/15	PER COMMENTS

SEAL

GEORGIA REGISTERED No. 18702 PROFESSIONAL ENGINEER PAUL S. BOYER

THIS DRAWING, AS AN INSTRUMENT OF SERVICE, IS AND SHALL REMAIN THE PROPERTY OF THE ENGINEER AND SHALL NOT BE REPRODUCED, PUBLISHED, OR USED IN ANY WAY WITHOUT THE PERMISSION OF THE ENGINEER.

THE CONTRACTOR SHALL VERIFY ALL DIMENSIONS AND EXISTING CONDITIONS AT THE SITE BEFORE PROCEEDING WITH EACH PHASE OF THE WORK.

Patton-Boyer, Inc.
LAND SURVEYORS & CIVIL ENGINEERS
909 ATLANTA HWY
GAINESVILLE, GEORGIA 30501
PHONE (770) 532 – 1492
FAX (770) 532 – 1992

GRAVITY SEWER PLAN AND PROFILES
FOR
WALTON POND PUMP STATION
LAND LOTS 156 & 184 ~ 4th LAND DISTRICT
CITY OF LOGANVILLE ~ WALTON COUNTY, GEORGIA

SHEET NUMBER
C5 22
OF

SCALE
1" = 50'

DATE
12/28/06

PROJECT NO.
03-243.09

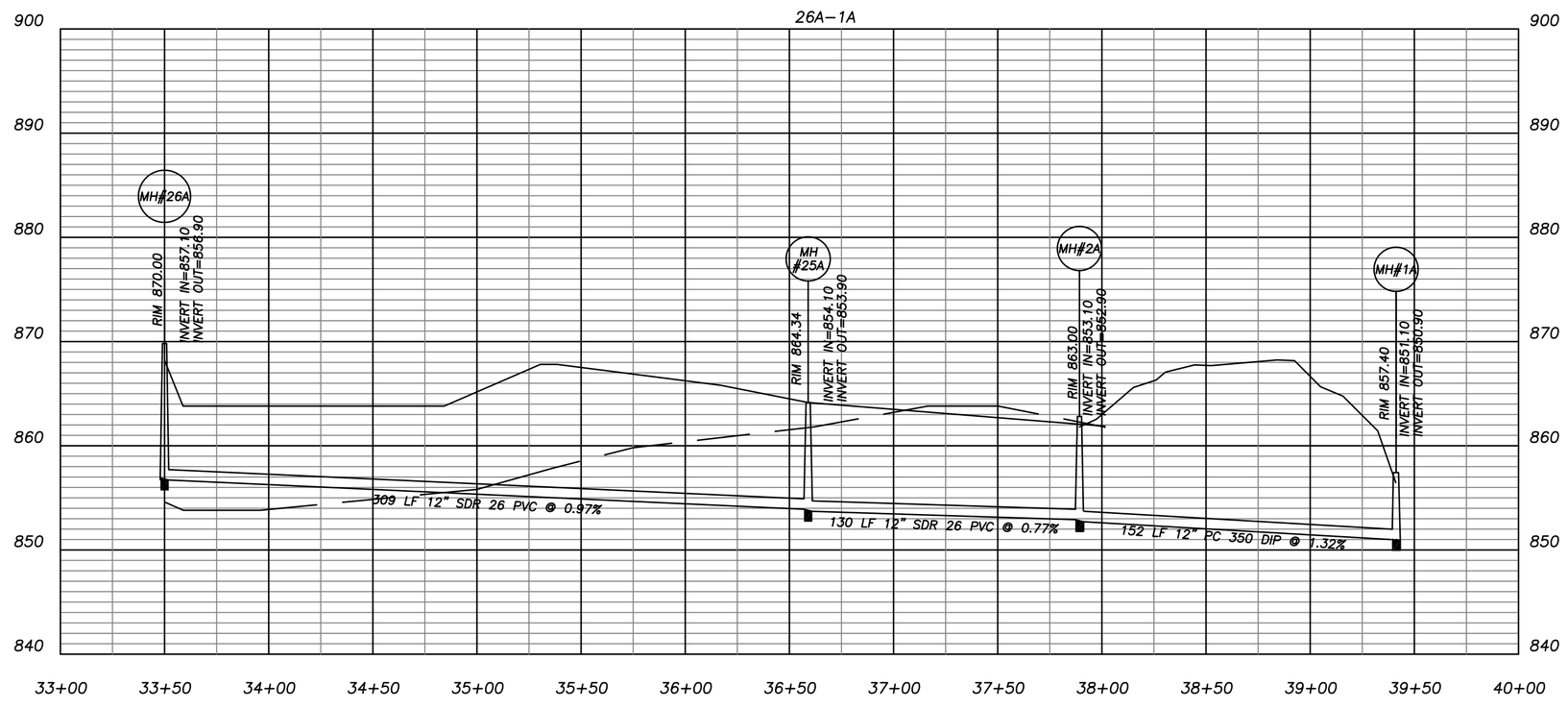

UTILITIES PROTECTION CENTER, INC.

Call FREE
THROUGHOUT GEORGIA
1 – 800 – 282 – 7411
IN ATLANTA: 325 – 5000

THREE WORKING DAYS BEFORE YOU DIG
ITS THE LAW

1 inch = 50 ft.

MAGNETIC

REVISIONS

No.	DATE	REMARKS
1.	2/15	REVISE ROUTE/ ADD UTILITIES
2.	4/25	PER COMMENTS
3.	10/15	PER COMMENTS

SEAL

GEORGIA
REGISTERED
No. 18702
PROFESSIONAL
ENGINEER
PAUL S. BOYER

THIS DRAWING, AS AN INSTRUMENT OF SERVICE, IS AND SHALL REMAIN THE PROPERTY OF THE ENGINEER AND SHALL NOT BE REPRODUCED, PUBLISHED, OR USED IN ANY WAY WITHOUT THE PERMISSION OF THE ENGINEER.

THE CONTRACTOR SHALL VERIFY ALL DIMENSIONS AND EXISTING CONDITIONS AT THE SITE BEFORE PROCEEDING WITH EACH PHASE OF THE WORK.

Patton-Boyer, Inc.
LAND SURVEYORS & CIVIL ENGINEERS
909 ATLANTA HWY
GAINESVILLE, GEORGIA 30501
PHONE (770) 532 – 1492
FAX (770) 532 – 1992

GRAVITY SEWER PLAN AND PROFILES
FOR
WALTON POND PUMP STATION
LAND LOTS 156 & 184 ~ 4th LAND DISTRICT
CITY OF LOGANVILLE WALTON COUNTY, GEORGIA

SHEET NUMBER
C6 22
OF

SCALE
1" = 50'

DATE
12/28/06

PROJECT NO.
03–243.09

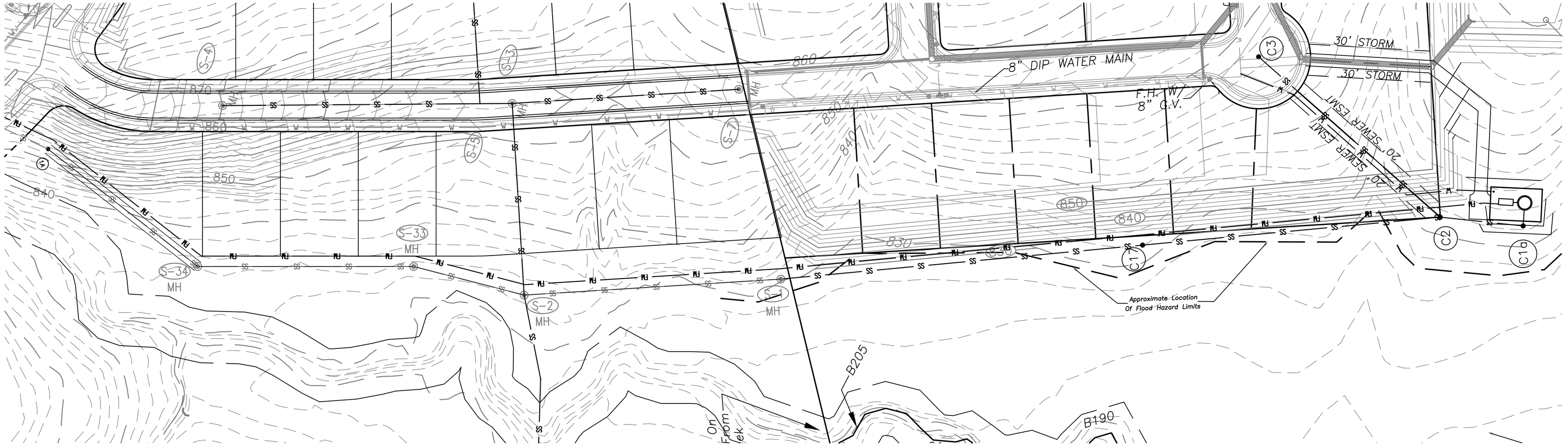

SANITARY SEWER S1–S5

SCALE: HORIZ. 1" = 50' VERT. 10'

SANITARY SEWER S2–S1A

SCALE: HORIZ. VERT.

UTILITIES PROTECTION CENTER, INC.

Call FREE
THROUGHOUT GEORGIA
1 – 800 – 282 – 7411
IN ATLANTA: 325 – 5000

THREE WORKING DAYS BEFORE YOU DIG
ITS THE LAW

*NOTE: SANITARY SEWER LINE S–1A – S–1 DESIGNED BY TRUVINE ENGINEERING.

REVISIONS

No.	DATE	REMARKS
1.	2/15	REVISE ROUTE/ ADD UTILITIES
2.	4/25	PER COMMENTS
3.	10/15	PER COMMENTS

SEAL

GEORGIA REGISTERED No. 18702 PROFESSIONAL ENGINEER PAUL S. BOYER

THIS DRAWING, AS AN INSTRUMENT OF SERVICE, IS AND SHALL REMAIN THE PROPERTY OF THE ENGINEER AND SHALL NOT BE REPRODUCED, PUBLISHED, OR USED IN ANY WAY WITHOUT THE PERMISSION OF THE ENGINEER.

THE CONTRACTOR SHALL VERIFY ALL DIMENSIONS AND EXISTING CONDITIONS AT THE SITE BEFORE PROCEEDING WITH EACH PHASE OF THE WORK.

Patton-Boyer, Inc.
LAND SURVEYORS & CIVIL ENGINEERS
909 ATLANTA HWY
GAINESVILLE, GEORGIA 30501
PHONE (770) 532 – 1492
FAX (770) 532 – 1992

GRAVITY SEWER PLAN AND PROFILES
FOR
WALTON POND PUMP STATION
LAND LOTS 156 & 184 ~ 4th LAND DISTRICT
CITY OF LOGANVILLE WALTON COUNTY, GEORGIA

SHEET NUMBER C7 22 OF

SCALE 1" = 50'

DATE 12/28/06

PROJECT NO. 03–243.09

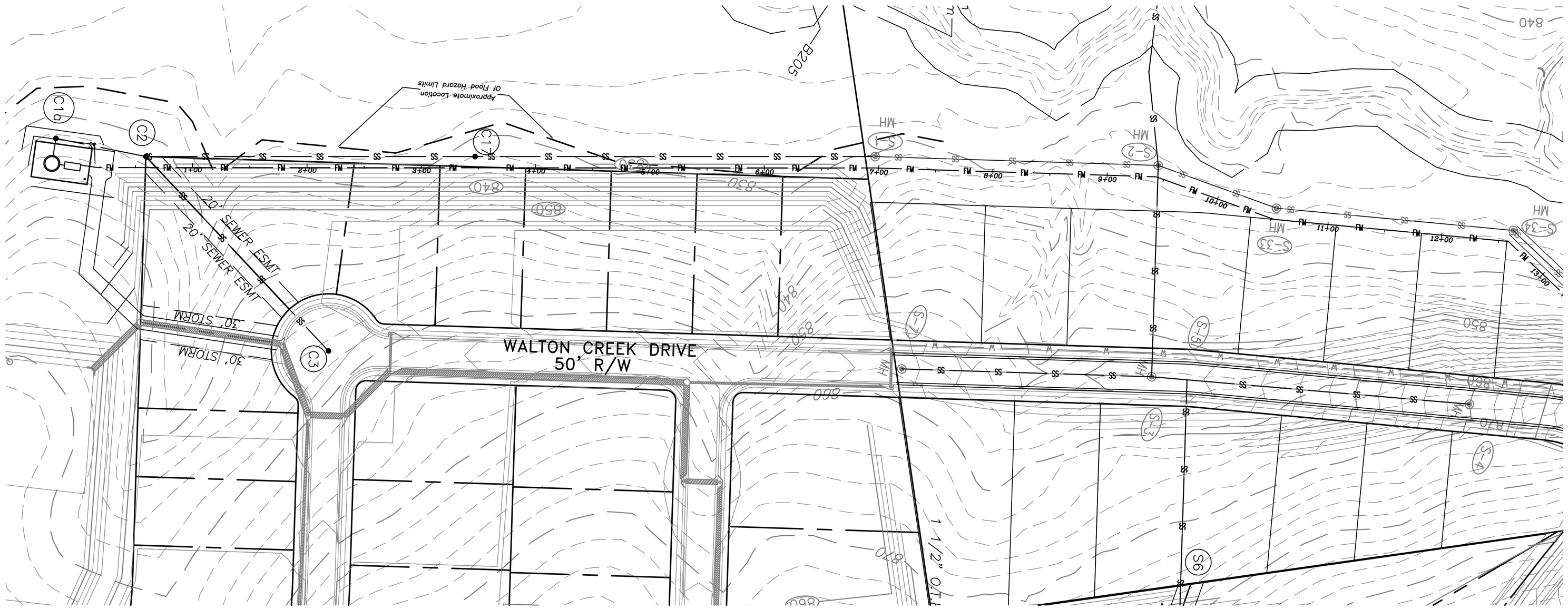

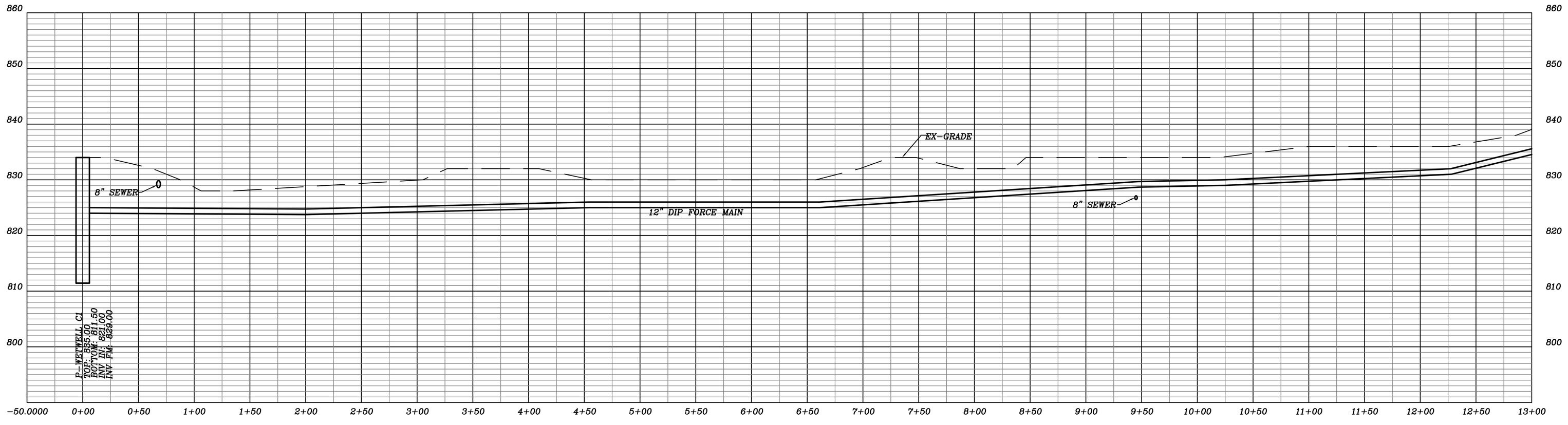

UTILITIES PROTECTION CENTER, INC.

Call FREE
THROUGHOUT GEORGIA
1 – 800 – 282 – 7411
IN ATLANTA: 325 – 5000

THREE WORKING DAYS BEFORE YOU DIG
ITS THE LAW

50 0 50 100 200
1 inch = 50 ft.

REVISIONS

No.	DATE	REMARKS
1.	2/15	REVISE ROUTE/ ADD UTILITIES
2.	4/25	PER COMMENTS
3.	10/15	PER COMMENTS

SEAL

GEORGIA REGISTERED No. 18702 PROFESSIONAL ENGINEER PAUL S. BOYER

THIS DRAWING, AS AN INSTRUMENT OF SERVICE, IS AND SHALL REMAIN THE PROPERTY OF THE ENGINEER AND SHALL NOT BE REPRODUCED, PUBLISHED, OR USED IN ANY WAY WITHOUT THE PERMISSION OF THE ENGINEER.

THE CONTRACTOR SHALL VERIFY ALL DIMENSIONS AND EXISTING CONDITIONS AT THE SITE BEFORE PROCEEDING WITH EACH PHASE OF THE WORK.

Patton-Boyer, Inc.
LAND SURVEYORS & CIVIL ENGINEERS
909 ATLANTA HWY
GAINESVILLE, GEORGIA 30501
PHONE (770) 532 – 1992
FAX (770) 532 – 1992

FORCE MAIN PLAN AND PROFILE
FOR
WALTON POND PUMP STATION
LAND LOTS 156 & 184 ~ 4th LAND DISTRICT
CITY OF LOGANVILLE ~ WALTON COUNTY, GEORGIA

SHEET NUMBER
C8 22
OF

SCALE
1" = 50'

DATE
12/28/06

PROJECT NO.
03–243.09

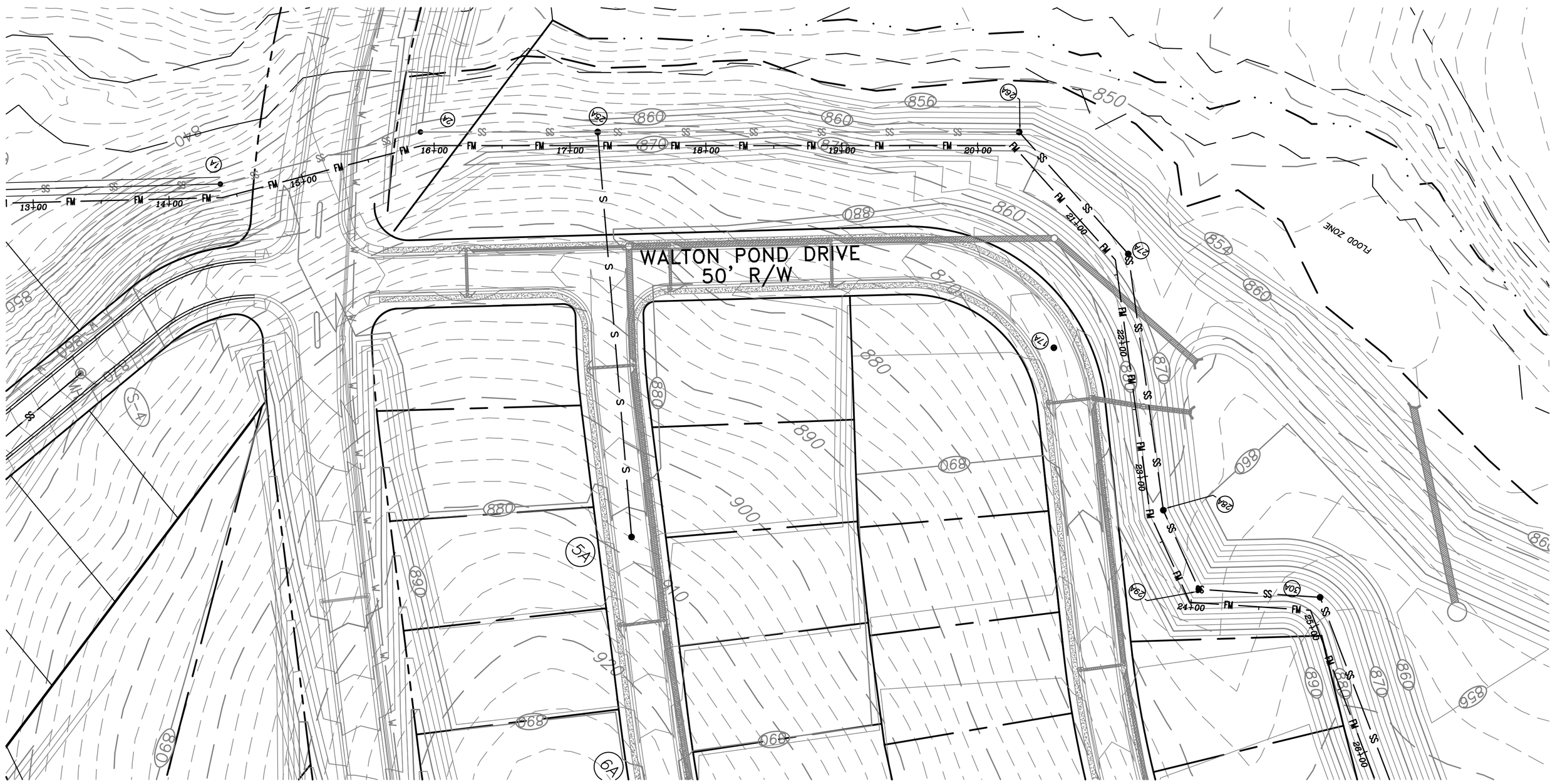

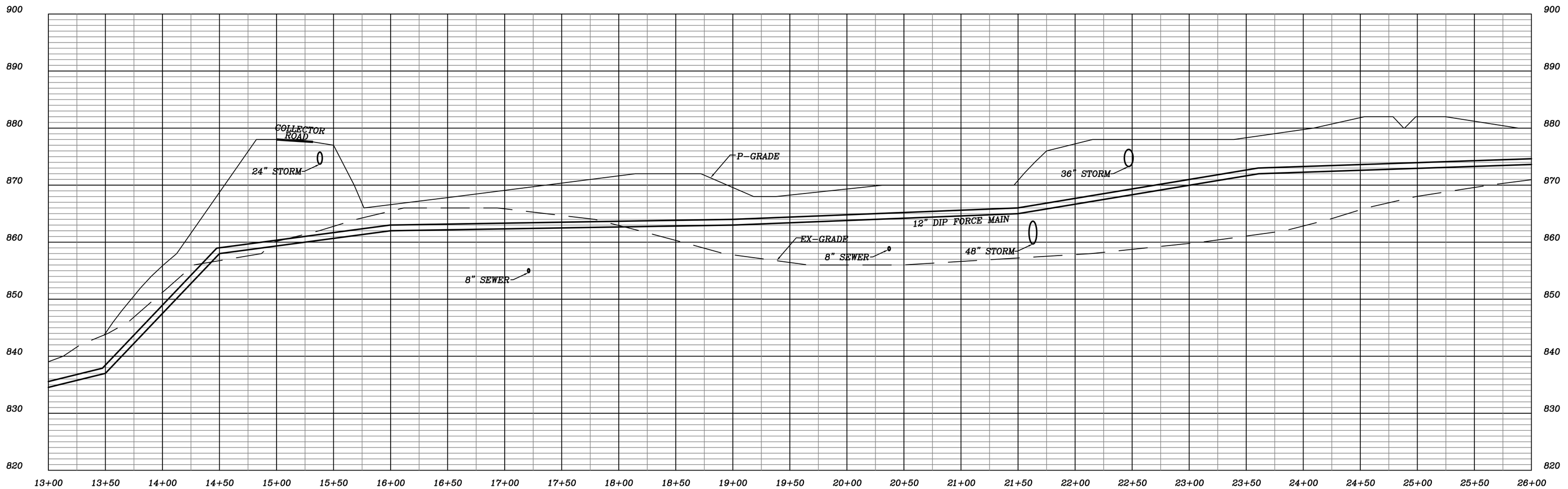

UTILITIES PROTECTION CENTER, INC.

Call FREE
THROUGHOUT GEORGIA
1 – 800 – 282 – 7411
IN ATLANTA: 325 – 5000

THREE WORKING DAYS BEFORE YOU DIG
ITS THE LAW

50 0 50 100 200
1 inch = 50 ft.

REVISIONS

No.	DATE	REMARKS
1.	2/15	REVISE ROUTE/ ADD UTILITIES
2.	4/25	PER COMMENTS
3.	10/15	PER COMMENTS

SEAL

GEORGIA REGISTERED No. 18702 PROFESSIONAL ENGINEER PAUL S. BOYER

THIS DRAWING, AS AN INSTRUMENT OF SERVICE, IS AND SHALL REMAIN THE PROPERTY OF THE ENGINEER AND SHALL NOT BE REPRODUCED, PUBLISHED, OR USED IN ANY WAY WITHOUT THE PERMISSION OF THE ENGINEER.

THE CONTRACTOR SHALL VERIFY ALL DIMENSIONS AND EXISTING CONDITIONS AT THE SITE BEFORE PROCEEDING WITH EACH PHASE OF THE WORK.

Patton-Boyer, Inc.
LAND SURVEYORS & CIVIL ENGINEERS
909 ATLANTA HWY
GAINESVILLE, GEORGIA 30501
P.O. BOX 1492
FAX (770) 532 – 1992

FORCE MAIN PLAN AND PROFILE
FOR
WALTON POND PUMP STATION
LAND LOTS 156 & 184 ~ 4th LAND DISTRICT
CITY OF LOGANVILLE WALTON COUNTY, GEORGIA

SHEET NUMBER
C9 22
OF

SCALE
1" = 50'

DATE
12/28/06

PROJECT NO.
03–243.09

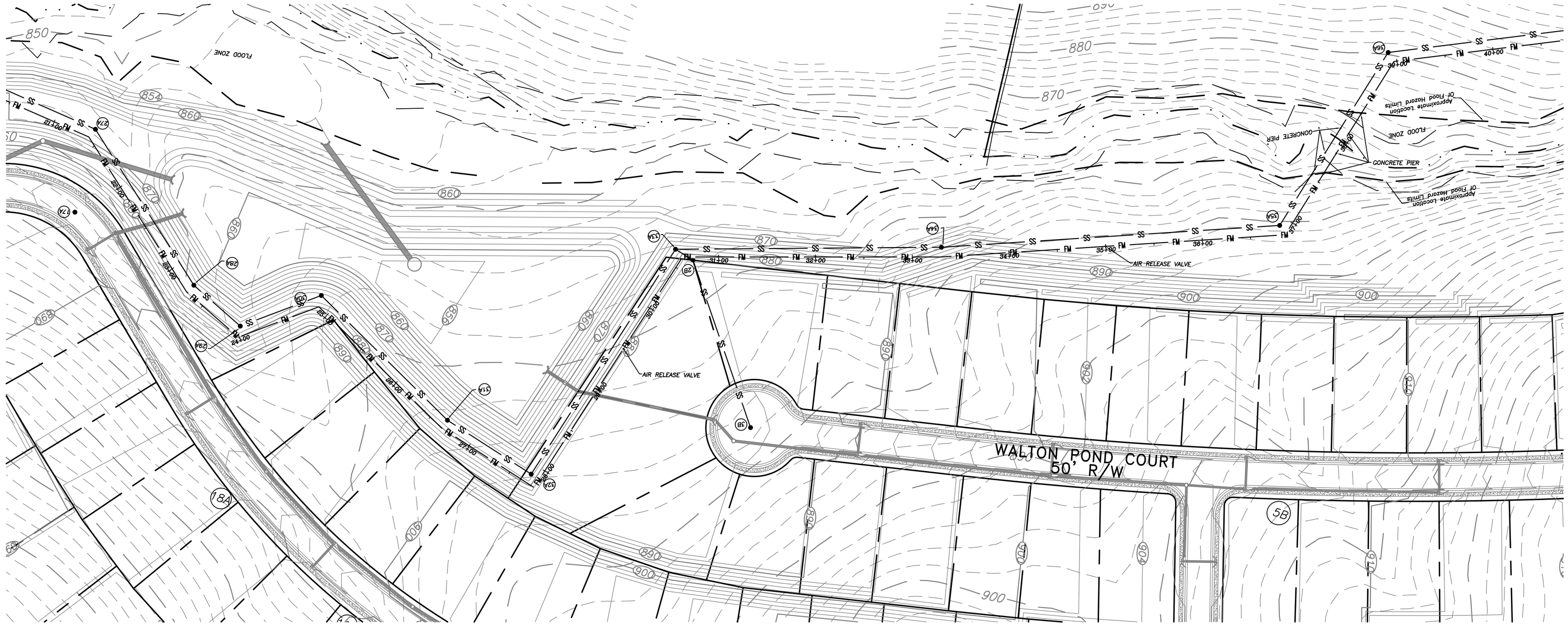

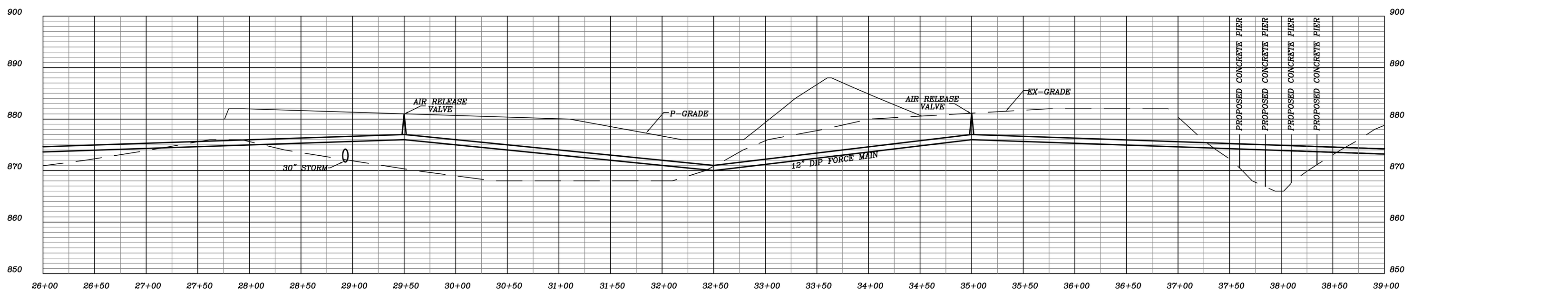

UTILITIES PROTECTION CENTER, INC.

Call FREE
THROUGHOUT GEORGIA
1 – 800 – 282 – 7411
IN ATLANTA: 325 – 5000

THREE WORKING DAYS BEFORE YOU DIG
ITS THE LAW

1 inch = 50 ft.

REVISIONS

No.	DATE	REMARKS
1.	2/15	REVISE ROUTE/ ADD UTILITIES
2.	4/25	PER COMMENTS
3.	10/15	PER COMMENTS

SEAL

GEORGIA REGISTERED No. 18702 PROFESSIONAL ENGINEER PAUL S. BOYER

THIS DRAWING, AS AN INSTRUMENT OF SERVICE, IS AND SHALL REMAIN THE PROPERTY OF THE ENGINEER AND SHALL NOT BE REPRODUCED, PUBLISHED, OR USED IN ANY WAY WITHOUT THE PERMISSION OF THE ENGINEER.

THE CONTRACTOR SHALL VERIFY ALL DIMENSIONS AND EXISTING CONDITIONS AT THE SITE BEFORE PROCEEDING WITH EACH PHASE OF THE WORK.

Patton-Boyer, Inc.
LAND SURVEYORS & CIVIL ENGINEERS
909 ATLANTA HWY
GAINESVILLE, GEORGIA 30501
PHONE (770) 532 – 1492
FAX (770) 532 – 1992

FORCE MAIN PLAN AND PROFILE
FOR
WALTON POND PUMP STATION
LAND LOTS 156 & 184 ~ 4th LAND DISTRICT
CITY OF LOGANVILLE ~ WALTON COUNTY, GEORGIA

SHEET NUMBER
C10 22
OF

SCALE
1" = 50'

DATE
12/28/06

PROJECT NO.
03–243.09

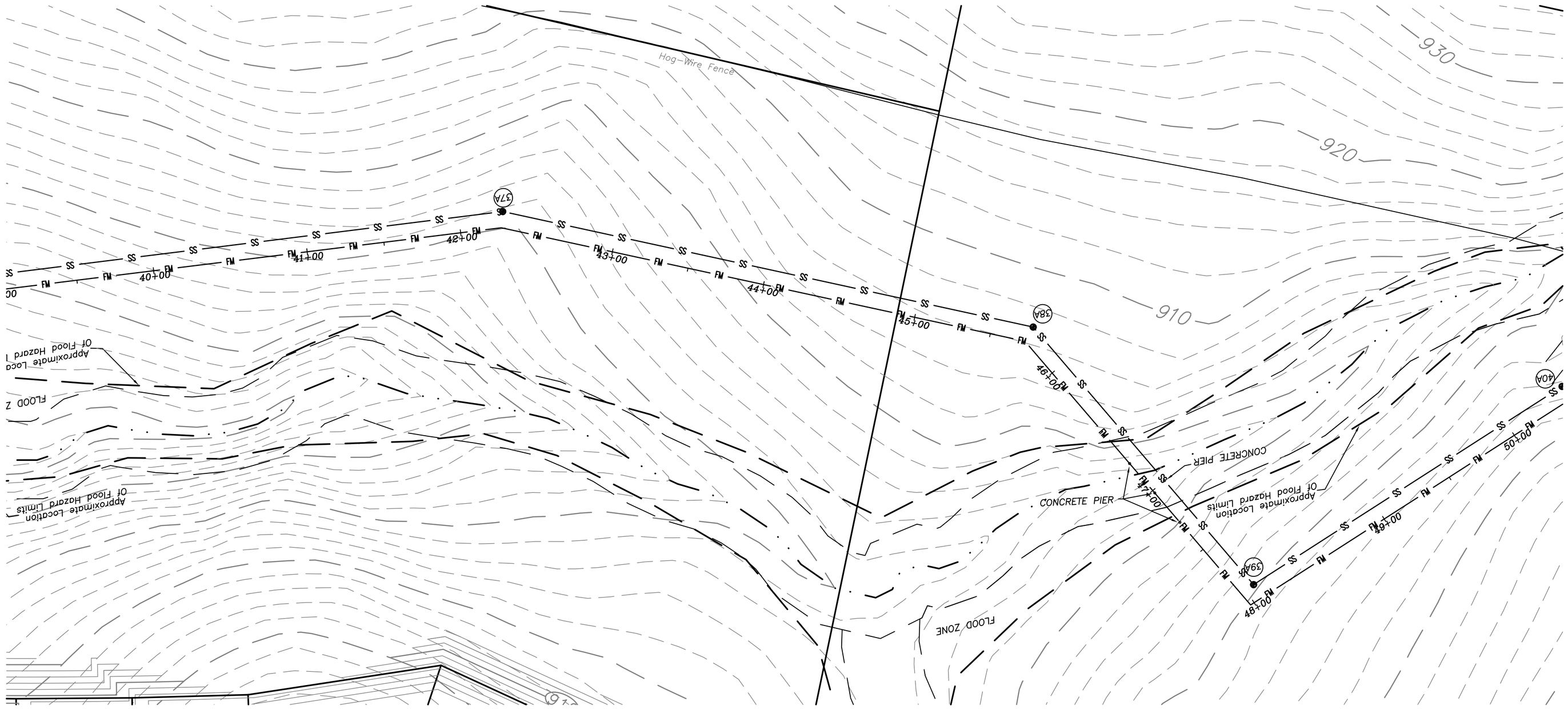

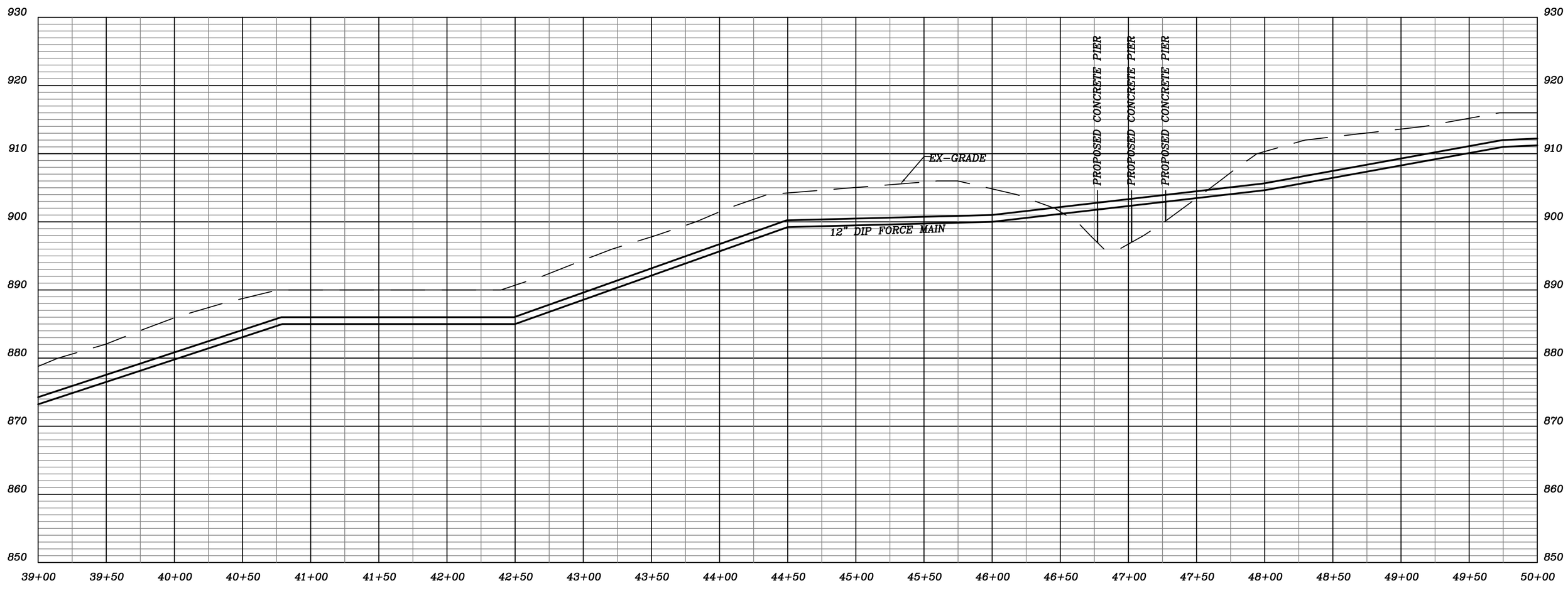

UTILITIES PROTECTION CENTER, INC.

Call FREE
THROUGHOUT GEORGIA
1 – 800 – 282 – 7411
IN ATLANTA: 325 – 5000

THREE WORKING DAYS BEFORE YOU DIG
ITS THE LAW

50 0 50 100 200
1 inch = 50 ft.

REVISIONS

No.	DATE	REMARKS
1.	2/15	REVISE ROUTE/ ADD UTILITIES
2.	4/25	PER COMMENTS
3.	10/15	PER COMMENTS

SEAL

GEORGIA REGISTERED No. 18702 PROFESSIONAL ENGINEER PAUL S. BOYER

THIS DRAWING, AS AN INSTRUMENT OF SERVICE, IS AND SHALL REMAIN THE PROPERTY OF THE ENGINEER AND SHALL NOT BE REPRODUCED, PUBLISHED, OR USED IN ANY WAY WITHOUT THE PERMISSION OF THE ENGINEER.

THE CONTRACTOR SHALL VERIFY ALL DIMENSIONS AND EXISTING CONDITIONS AT THE SITE BEFORE PROCEEDING WITH EACH PHASE OF THE WORK.

Patton-Boyer, Inc.
LAND SURVEYORS & CIVIL ENGINEERS
909 ATLANTA HWY
GAINESVILLE, GEORGIA 30501
PHONE (770) 532 – 1492
FAX (770) 532 – 1992

FORCE MAIN PLAN AND PROFILE
FOR
WALTON POND PUMP STATION
LAND LOTS 156 & 184 ~ 4th LAND DISTRICT
CITY OF LOGANVILLE ~ WALTON COUNTY, GEORGIA

SHEET NUMBER
C11 22
OF

SCALE
1" = 50'

DATE
12/28/06

PROJECT NO.
03-243.09

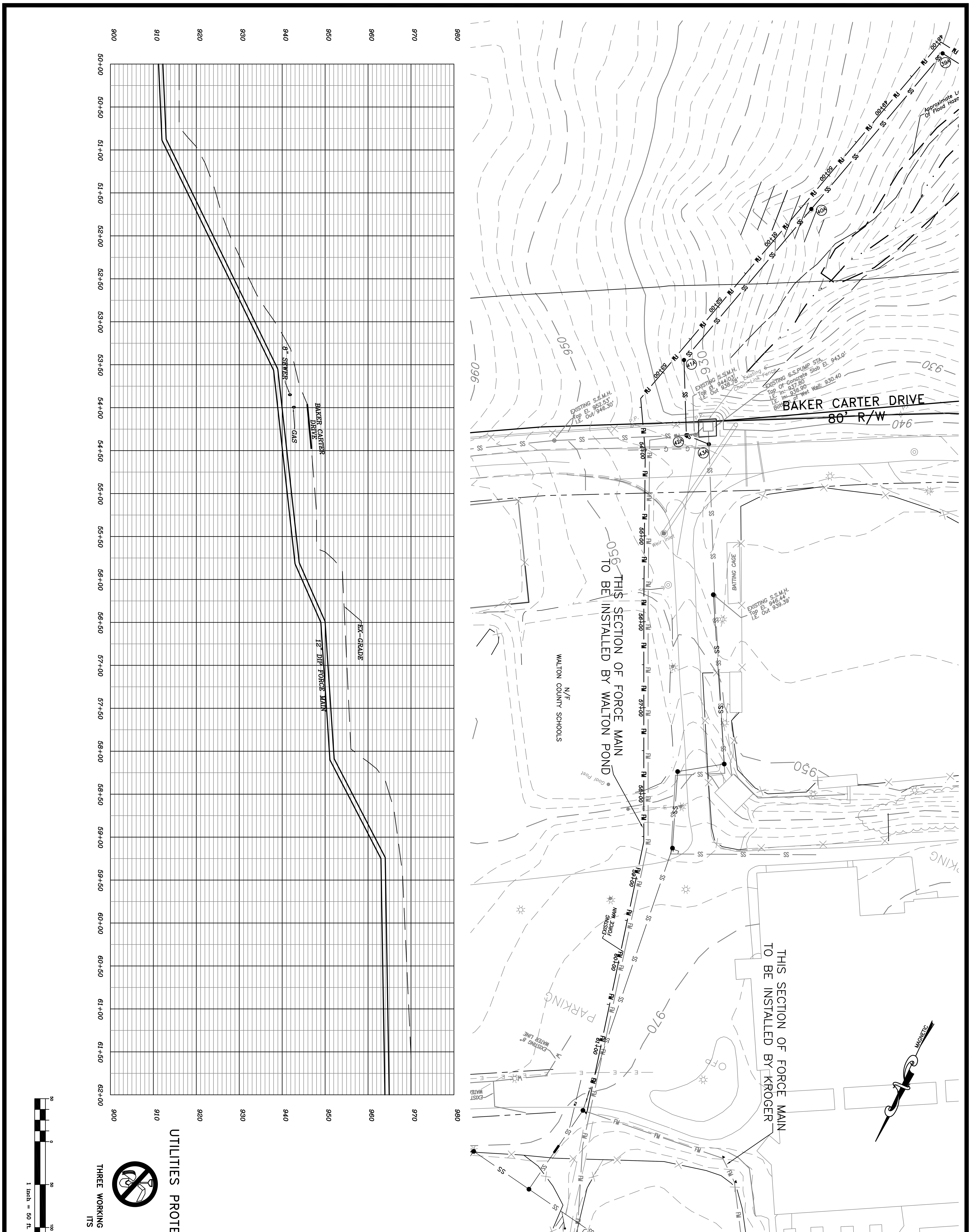

UTILITIES PROTECTION CENTER, INC.

Call FREE
THROUGHOUT GEORGIA
1 – 800 – 282 – 7411
IN ATLANTA: 325 – 5000

THREE WORKING DAYS BEFORE YOU DIG ITS THE LAW

PROJECT NO.	DATE	SCALE	SHEET NUMBER
03-243.09	12/28/06	1" = 50'	C12 OF 22

FORCE MAIN PLAN AND PROFILE
FOR
WALTON POND PUMP STATION
LAND LOTS 156 & 184 ~ 4th LAND DISTRICT
CITY OF LOGANVILLE WALTON COUNTY, GEORGIA

Patton - Boyer, Inc.
LAND SURVEYORS & CIVIL ENGINEERS
909 ATLANTA HWY
GAINESVILLE, GEORGIA 30501
PHONE (770) 532 – 6492
FAX (770) 532 – 1995

THIS DRAWING, AS AN INSTRUMENT OF SERVICE, IS AND SHALL REMAIN THE PROPERTY OF THE ENGINEER AND SHALL NOT BE REPRODUCED, PUBLISHED, OR USED IN ANY WAY WITHOUT THE PERMISSION OF THE ENGINEER.

THE CONTRACTOR SHALL VERIFY ALL DIMENSIONS AND EXISTING CONDITIONS AT THE SITE BEFORE PROCEEDING WITH EACH PHASE OF THE WORK.

SEAL
GEORGIA REGISTERED No. 18702 PROFESSIONAL ENGINEER PAUL S. BOYER

REVISIONS		
No.	DATE	REMARKS
1.	2/15	REVISE ROUTE/ ADD UTILITIES
2.	4/25	PER COMMENTS
3.	10/15	PER COMMENTS

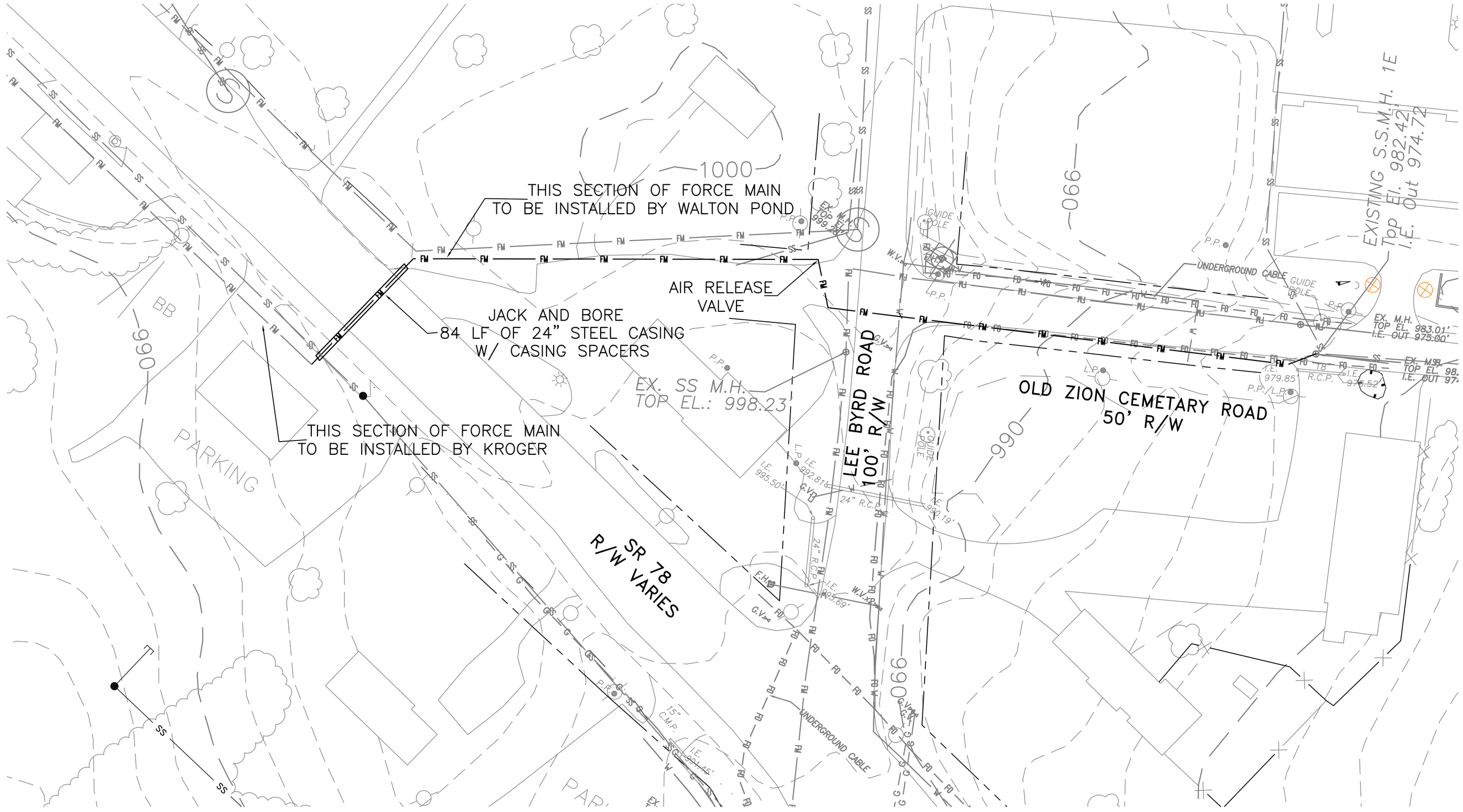

UTILITIES PROTECTION CENTER, INC.

Call FREE
THROUGHOUT GEORGIA
1 – 800 – 282 – 7411
IN ATLANTA: 325 – 5000

THREE WORKING DAYS BEFORE YOU DIG
ITS THE LAW

50 0 50 100 200
1 inch = 50 ft.

REVISIONS

No.	DATE	REMARKS
1.	2/15	REVISE ROUTE/ ADD UTILITIES
2.	4/25	PER COMMENTS
3.	10/15	PER COMMENTS

SEAL

GEORGIA REGISTERED No. 18702 PROFESSIONAL ENGINEER PAUL S. BOYER

THIS DRAWING, AS AN INSTRUMENT OF SERVICE, IS AND SHALL REMAIN THE PROPERTY OF THE ENGINEER AND SHALL NOT BE REPRODUCED, PUBLISHED, OR USED IN ANY WAY WITHOUT THE PERMISSION OF THE ENGINEER.

THE CONTRACTOR SHALL VERIFY ALL DIMENSIONS AND EXISTING CONDITIONS AT THE SITE BEFORE PROCEEDING WITH EACH PHASE OF THE WORK.

Patton-Boyer, Inc.
LAND SURVEYORS & CIVIL ENGINEERS
909 ATLANTA HWY
GAINESVILLE, GEORGIA 30501
PHONE (770) 532 – 6492
FAX (770) 532 – 1995

FORCE MAIN PLAN AND PROFILE
FOR
WALTON POND PUMP STATION
LAND LOTS 156 & 184 ~ 4th LAND DISTRICT
CITY OF LOGANVILLE WALTON COUNTY, GEORGIA

SHEET NUMBER
C13 22
OF

SCALE
1" = 50'

DATE
12/28/06

PROJECT NO.
03–243.09

30' STORM

30' STORM

30' SEWER ESMT

30' SEWER ESMT

PROPOSED 2" WATER METER

MAGNETIC

12' WIDE CONCRETE OR ASPHALT DRIVE

EMERGENCY GENERATOR INSTALLED ON 3,000 psi CONCRETE PAD, 8" THICK, REINFORCED WITH 6 x 6/10 x 10 WIRE MESH

UTILITY PAD MTD. TRANSF. 120/208V, 3ø, 4W.

ATS, RTU & DUPLEX RECEPTACLE

SERVICE EQUIPMENT INSTALLED ON HEAVY DUTY FABRICATED GALVANIZED OR ALUMINUM FRAME WITH SUPPORT POSTS SET IN 24"DEEP X 12" DIA. CONCRETE BASES.

PUMP PANEL WITH SUPPORT LEGS. INSTALL ON CONCRETE PAD.

UTILITY POLE WITH AREA SECURITY LIGHT AND SCADA RTU ANTENNA

MAIN SWITCH & SURGE ARRESTER

UTILITY METER

Proposed Yard Hydrant and Backflow Preventer (Air gap type installed above ground with insulated box and heat tape).

1" WATER SERVICE LINE

6"

Plug Valve

VALVE VAULT

TOP ELEV. 835.00

I.E. (in) 821.00

23'x20' CONCRETE TURN AROUND

Proposed Gate w/ Gatekeeper

PROPOSED 12' Dia. WET WELL

"NO TRESPASSING" SIGNS TO BE INSTALLED ON EACH OF THE FOUR SIDES OF THE PERIMETER FENCE.

Proposed Concrete Slab, 6" Thickness, 3,000 PSI to Extend 6' Beyond Fence.

Proposed Chain Link Fence, (49'x 31'), w/ 14' Wide Gate

Proposed Gorbel 1.5 Ton Crane w/ electric hoist Model No. FS 300-16-12 with 7'x7' Concrete Slab, to be reinforced to crane manufacturers specifications

UTILITIES PROTECTION CENTER, INC.

Call FREE
THROUGHOUT GEORGIA
1 - 800 - 282 - 7411
IN ATLANTA: 325 - 5000

THREE WORKING DAYS BEFORE YOU DIG
ITS THE LAW

10 0 10 20 40
1 inch = 10 ft.

REVISIONS

No.	DATE	REMARKS
1.	2/15	REVISE ROUTE/ ADD UTILITIES
2.	4/25	PER COMMENTS
3.	8/20	REVISED SITE PLAN
4.	10/15	PER COMMENTS

SEAL

GEORGIA REGISTERED PROFESSIONAL ENGINEER No. 18702 PAUL S. BOTH

THIS DRAWING, AS AN INSTRUMENT OF SERVICE, IS AND SHALL REMAIN THE PROPERTY OF THE ENGINEER AND SHALL NOT BE REPRODUCED, PUBLISHED, OR USED IN ANY WAY WITHOUT THE PERMISSION OF THE ENGINEER.

THE CONTRACTOR SHALL VERIFY ALL DIMENSIONS AND EXISTING CONDITIONS AT THE SITE BEFORE PROCEEDING WITH EACH PHASE OF THE WORK.

Patton-Boyer, Inc.
LAND SURVEYORS & CIVIL ENGINEERS
909 ATLANTA HWY
GAINESVILLE, GEORGIA 30501
PHONE (770) 532 - 1492
FAX (770) 532 - 1992

PUMP STATION SITE PLAN
FOR
WALTON POND
PUMP STATION
LAND LOTS 156 & 184 ~ 4th LAND DISTRICT
CITY OF LOGANVILLE ~ WALTON COUNTY, GEORGIA

SHEET NUMBER
C14 22
OF

SCALE
1" = 10'

DATE
12/28/06

PROJECT NO.
03-243.09

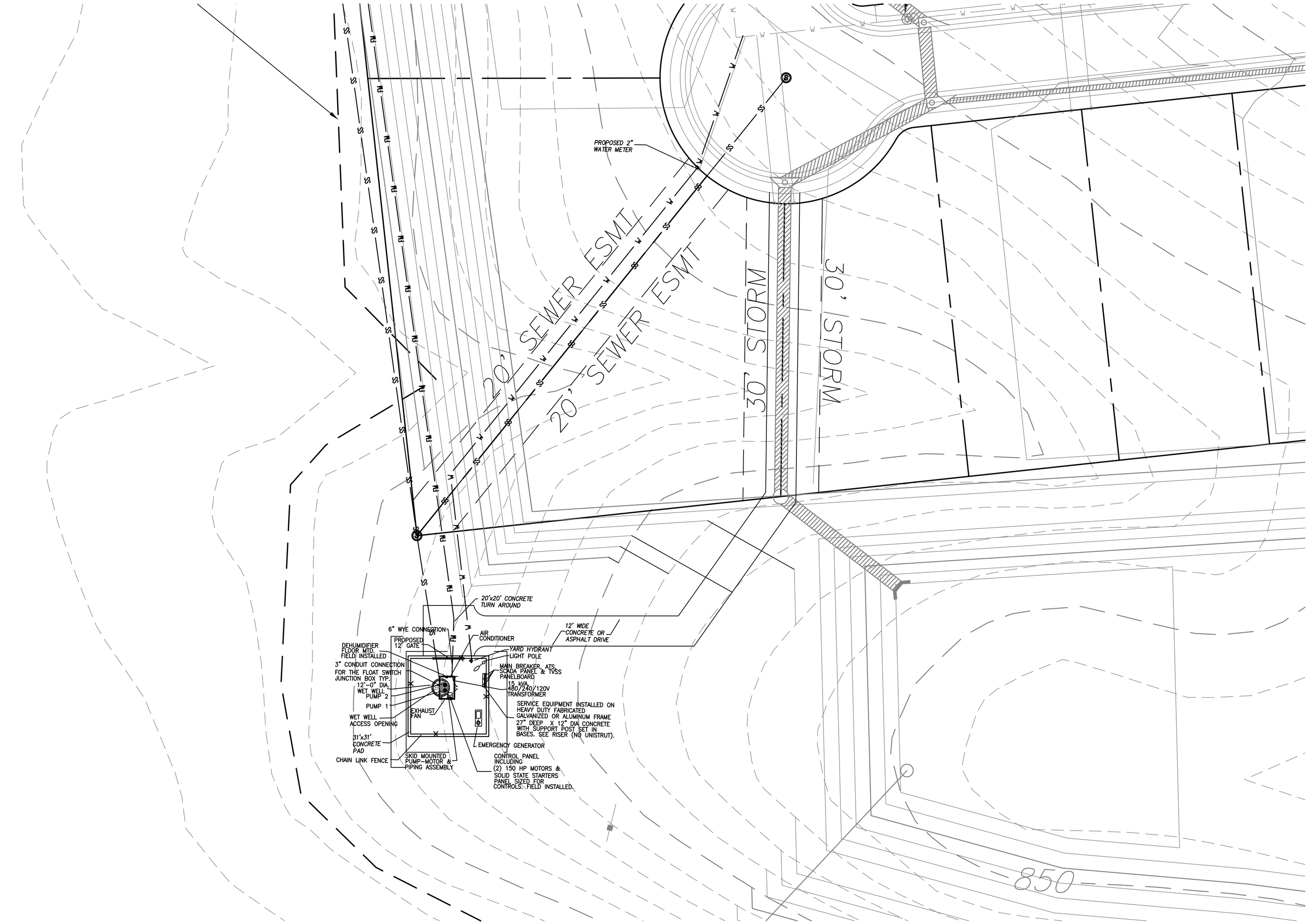

UTILITIES PROTECTION CENTER, INC.

Call FREE
THROUGHOUT GEORGIA
1 – 800 – 282 – 7411
IN ATLANTA: 325 – 5000

THREE WORKING DAYS BEFORE YOU DIG
ITS THE LAW

20 0 20 40 80
1 inch = 20 ft.

REVISIONS

No.	DATE	REMARKS
1.	2/15	REVISE ROUTE/ ADD UTILITIES
2.	4/25	PER COMMENTS

SEAL

STATE OF GEORGIA
REGISTERED
No. 18702
PROFESSIONAL
ENGINEER
PAUL S. BOYER

THIS DRAWING, AS AN INSTRUMENT OF SERVICE, IS AND SHALL REMAIN THE PROPERTY OF THE ENGINEER AND SHALL NOT BE REPRODUCED, PUBLISHED, OR USED IN ANY WAY WITHOUT THE PERMISSION OF THE ENGINEER.

THE CONTRACTOR SHALL VERIFY ALL DIMENSIONS AND EXISTING CONDITIONS AT THE SITE BEFORE PROCEEDING WITH EACH PHASE OF THE WORK.

Patton - Boyer, Inc.
LAND SURVEYORS & CIVIL ENGINEERS
909 ATLANTA HWY.
GAINESVILLE, GEORGIA 30501
PHONE (770) 532 – 6492
FAX (770) 532 – 1995

PUMP STATION SITE PLAN
FOR
WALTON POND PUMP STATION
LAND LOTS 156 & 184 ~ 4th LAND DISTRICT
CITY OF LOGANVILLE WALTON COUNTY, GEORGIA

SHEET NUMBER
C15 24
OF

SCALE
1" = 20'

DATE
12/28/06

PROJECT NO.
03–243.09

NARRATIVE:

I. DESCRIPTION:
THE SCOPE OF THIS PROJECT IS TO INSTALL A REGIONAL SANITARY SEWER PUMP STATION TO SERVE EXISTING AND PROPOSED RESIDENTIAL AND COMMERCIAL DEVELOPMENTS.
DISTURBED ACREAGE: 5.16 ACRES TO BE DISTURBED
ZONED: VARIOUS ZONINGS

II. EXISTING SITE CONDITIONS:
TOPOGRAPHY: MODERATE TO STEEP SLOPE (5–33%)
VEGETATION: WOODED
DRAINAGE: SEE GRADING AND DRAINAGE PLAN

III. ADJACENT AREAS:
NORTH: UNNAMED BRANCH STEEP SLOPE (15–50%)
EAST: RESIDENTIAL SUBDIVISION SLOPE (5–50%)
WEST: UNNAMED BRANCH STEEP SLOPE (15–50%)
SOUTH: UNNAMED BRANCH STEEP SLOPE (15–50%)

IV. CRITICAL AREAS: CARE SHALL BE TAKEN TO PROTECT NEARBY AREAS FROM SEDIMENT INFILTRATION. NO FLOODING OR CHANNEL DEGRADATION SHALL RESULT FROM DEVELOPMENT. SPECIAL ATTENTION WILL BE GIVEN TO FILLS OVER 5' IN HEIGHT.

V. GRADING:
DISTURBED EARTH VOLUME: (ESTIMATED)
FILL: 100 CY CUT: 100 CY

VI. PROPOSED CONSTRUCTION DATES:
BEGINNING: JANUARY 2007
FINAL STABILIZATION: FEBRUARY 2007

VII. EROSION CONTROL PLAN:
CLEARING TO BE KEPT TO A MINIMUM. A STONE PAD (Co) TO BE PLACED AT CONSTRUCTION EXIT TO PREVENT MUD TRACKING FROM THE SITE. ALL SLOPES TO BE SURFACE ROUGHENED (Su) TO PREVENT EXCESSIVE WASHING OF SLOPES. VEGETATION AND MULCH (Ds2,Ds3) WILL BE APPLIED TO APPLICABLE AREAS IMMEDIATELY AFTER GRADING IS COMPLETED. LAND DISTURBING WILL BE SCHEDULED TO LIMIT EXPOSURE OF BARE SOILS TO EROSIVE ELEMENTS. ALL EROSION CONTROL MEASURES SHALL BE IN PLACE PRIOR TO BEGINNING ANY LAND DISTURBING ACTIVITY.

VIII. SEDIMENT CONTROL PROGRAM:
SEDIMENT CONTROL WILL BE ACCOMPLISHED BY THE INSTALLATION OF REINFORCED SILT FENCE (Sd1) ALONG TOE OF ALL FILL SLOPES. INLET SEDIMENT TRAPS (Sd2) WILL BE USED AT ALL STORM DRAIN INLETS TO PREVENT SILT FROM ENTERING THE STORM DRAIN SYSTEM. VEGETATION AND MULCH (Ds2,Ds3) WILL BE APPLIED TO APPLICABLE AREAS TO PREVENT DUST AND SEDIMENT FROM LEAVING THESE AREAS. ALL SEDIMENT CONTROL MEASURES SHALL BE IN PLACE PRIOR TO BEGINNING LAND DISTURBING ACTIVITY.

IX. STANDARDS AND SPECIFICATIONS:
ALL DESIGNS WILL CONFORM TO
AND ALL WORK WILL BE PERFORMED IN ACCORDANCE WITH THE STANDARDS AND SPECIFICATIONS OF THE PUBLICATION ENTITLED "MANUAL FOR EROSION AND SEDIMENT CONTROL IN GEORGIA", LATEST EDITION.

X. MAINTENANCE STATEMENT:
SEDIMENT AND EROSION CONTROL MEASURES WILL BE INSPECTED DAILY. ANY DAMAGE OBSERVED WILL BE REPAIRED BY THE END OF THE DAY. CLEANOUT OF SEDIMENT CONTROL STRUCTURES WILL BE ACCOMPLISHED IN ACCORDANCE WITH THE SPECIFICATIONS AND SEDIMENT DISPOSAL ACCOMPLISHED BY SPREADING ON THE SITE. SEDIMENT BASINS AND BARRIERS WILL REMAIN IN PLACE UNTIL SEDIMENT CONTRIBUTING AREAS ARE STABILIZED. THE SEDIMENT FENCES AND BARRIERS WILL THEN BE REMOVED, AND THE AREAS OCCUPIED BY THESE STRUCTURES VEGETATED. GUIDELINES FOR THE MAINTENANCE OF ESTABLISHED VEGETATION WILL BE PROVIDED TO THE OWNER WHEN ALL DISTURBED AREAS ARE STABILIZED. ADDITIONAL EROSION AND SEDIMENT CONTROL MEASURES WILL BE INSTALLED IF DEEMED NECESSARY BY ON-SITE INSPECTION.

XI. "THE INSTALLATION OF EROSION CONTROL MEASURES AND PRACTICES SHALL TAKE PLACE PRIOR TO OR CONCURRENT WITH LAND DISTURBING ACTIVITIES."

XII. PERMANENT STABILIZATION:
SITE TO BE STABILIZED BY MULCHING AND VEGETATING DISTURBED AREAS WITH GRASS (SEE GRASSING RATES DETAIL)

XIII. THE INSTALLATION OF EROSION CONTROL MEASURES AND PRACTICES SHALL TAKE PLACE PRIOR TO, OR CONCURRENT WITH, LAND DISTURBING ACTIVITIES.

XIV. ANY DISTURBED AREA LEFT EXPOSED FOR A PERIOD GREATER THAN 14 DAYS SHALL BE STABILIZED WITH MULCH OR TEMPORARY SEEDING.

XV. EROSION AND SEDIMENTATION CONTROL MEASURES AND PRACTICES SHALL BE MAINTAINED AT ALL TIMES. IF FULL IMPLEMENTATION OF THE APPROVED PLAN DOES NOT PROVIDE FOR EFFECTIVE EROSION AND SEDIMENT CONTROL, ADDITIONAL EROSION AND SEDIMENT CONTROL MEASURES SHALL BE IMPLEMENTED TO CONTROL OR TREAT THE SEDIMENT SOURCE.

XVI. THE ESCAPE OF SEDIMENT FROM THE SITE SHALL BE PREVENTED BY THE INSTALLATION OF EROSION AND SEDIMENT CONTROL MEASURES AND PRACTICES PRIOR, OR CONCURRENT WITH, LAND DISTURBANCE ACTIVITIES

INITIAL EROSION CONTROL (Sd1) TYPE "C" (Co)

INTERMEDIATE EROSION CONTROL (Sd1) TYPE "C" (Rt) (Ds1) (Ds2)

FINAL EROSION CONTROL (Ds3)

CONSTRUCTION SCHEDULE
2007

ACTIVITY	JANUARY					FEBRUARY				
INSTALL CONSTRUCTION EXITS	■									
INSTALL EROSION CONTROL MEASURES	■									
MAINTAIN EROSION CONTROL MEASURES	■	■	■	■	■	■	■	■	■	■
INSTALL TREE PROTECTION FENCING	■									
PERFORM CLEARING, GRUBBING, AND GRADING		■	■							
INSTALL SANITARY SEWER SYSTEM				■	■	■				
INSTALL TEMPORARY VEGETATION				■	■	■				
INSTALL FINAL LANDSCAPING/VEGETATION									■	■
SITE CLEANUP (CLEAN STORM DRAINS, ETC.)										■

REVISIONS

No.	DATE	REMARKS
1.	2/15	REVISE ROUTE/ ADD UTILITIES
2.	4/25	PER COMMENTS

SEAL

GEORGIA REGISTERED Nº 18702 PROFESSIONAL ENGINEER PAUL S. BOYDEN

THIS DRAWING, AS AN INSTRUMENT OF SERVICE, IS AND SHALL REMAIN THE PROPERTY OF THE ENGINEER AND SHALL NOT BE REPRODUCED, PUBLISHED, OR USED IN ANY WAY WITHOUT THE PERMISSION OF THE ENGINEER.

THE CONTRACTOR SHALL VERIFY ALL DIMENSIONS AND EXISTING CONDITIONS AT THE SITE BEFORE PROCEEDING WITH EACH PHASE OF THE WORK.

Patton-Boyden, Inc.
LAND SURVEYORS & CIVIL ENGINEERS
809 ATLANTA HWY 30501
GAINESVILLE, GEORGIA
PHONE (770) 532 – 6492
FAX (770) 532 – 1995

EROSION CONTROL PLAN
FOR
WALTON POND PUMP STATION
LAND LOTS 156 & 184 ~ 4th LAND DISTRICT
CITY OF LOGANVILLE WALTON COUNTY, GEORGIA

SHEET NUMBER
C16 24
OF

SCALE 1" = 100'

DATE 12/28/06

PROJECT NO. 03–243.09

EROSION CONTROL PLAN
FOR
WALTON POND
PUMP STATION
LAND LOTS 156 & 184 ~ 4th LAND DISTRICT
CITY OF LOGANVILLE WALTON COUNTY, GEORGIA

SHEET NUMBER
C17.24
OF

SCALE
1" = 100'

DATE
12/28/06

PROJECT NO.
03-243.09

Patton-Boyer, Inc.
LAND SURVEYORS & CIVIL ENGINEERS
909 ATLANTA HWY.
GAINESVILLE, GA 30501
PHONE (770) 532 - 6492
FAX (770) 532 - 1995

REVISIONS

No.	DATE	REMARKS
1.	2/15	REVISE ROUTE/ ADD UTILITIES
2.	4/25	PER COMMENTS

SEAL
GEORGIA REGISTERED PROFESSIONAL PAUL S. BOYER No. 19702

THIS DRAWING, AS AN INSTRUMENT OF SERVICE, IS AN SHALL REMAIN THE PROPERTY OF THE ENGINEER AND SHALL NOT BE REPRODUCED, PUBLISHED OR USED IN ANY WAY WITHOUT THE PERMISSION OF THE ENGINEER.

THE CONTRACTOR SHALL VERIFY ALL DIMENSIONS AND EXISTING CONDITIONS WITH EACH PHASE OF THE WORK.

1 inch = 100 ft.

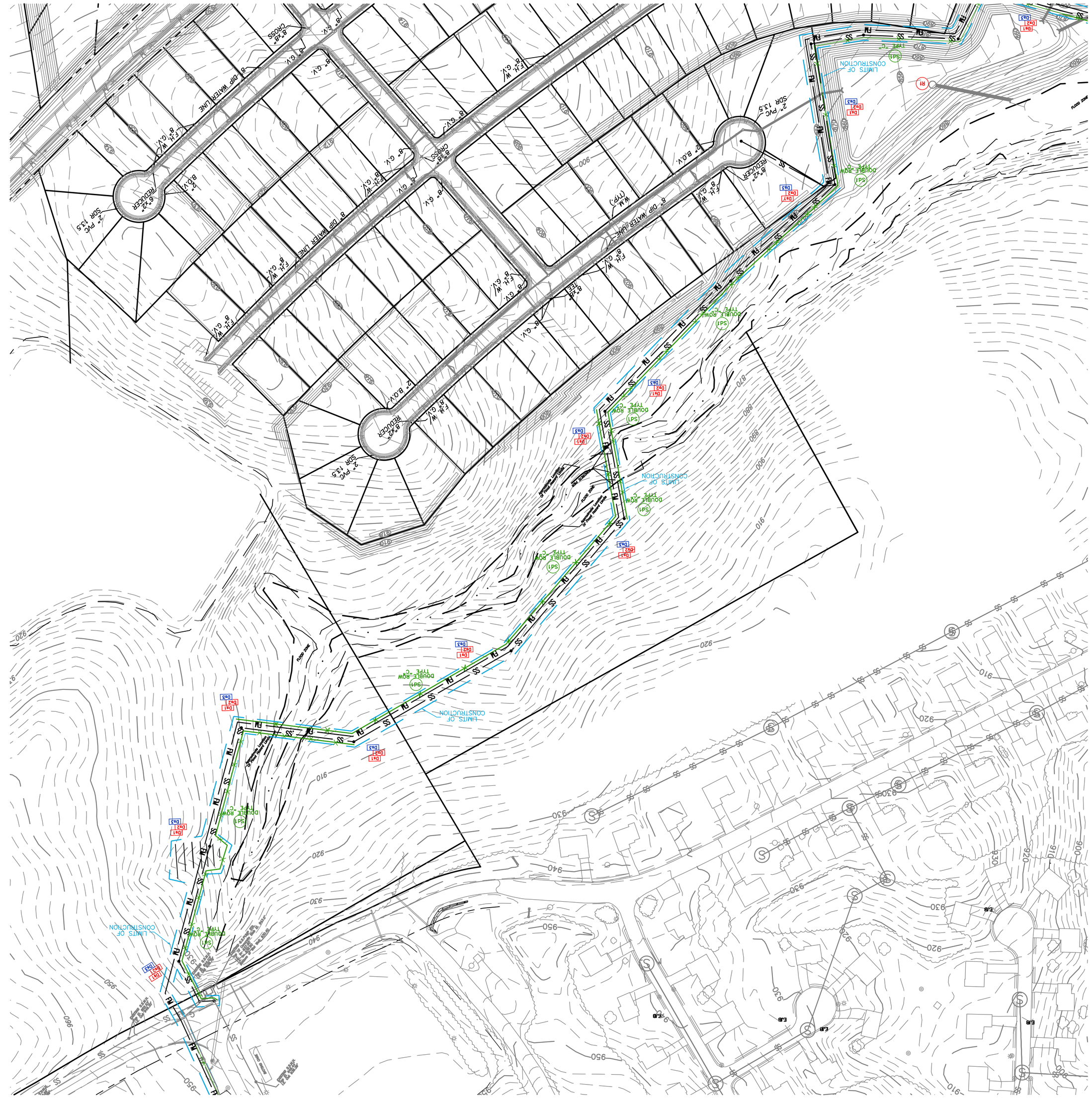

NARRATIVE:

I. DESCRIPTION:
THE SCOPE OF THIS PROJECT IS TO INSTALL A REGIONAL SANITARY SEWER PUMP STATION TO SERVE EXISTING AND PROPOSED RESIDENTIAL AND COMMERCIAL DEVELOPMENTS.
DISTURBED ACREAGE: 5.16 ACRES TO BE DISTURBED
ZONED: VARIOUS ZONINGS

II. EXISTING SITE CONDITIONS:
TOPOGRAPHY: MODERATE TO STEEP SLOPE (9-33%)
VEGETATION: WOODED
DRAINAGE: SEE GRADING AND DRAINAGE PLAN

III. ADJACENT AREAS:
NORTH: UNNAMED BRANCH STEEP SLOPE (15-30%)
EAST: RESIDENTIAL SUBDIVISION SLOPE (5-30%)
WEST: UNNAMED BRANCH STEEP SLOPE (15-60%)
SOUTH: UNNAMED BRANCH STEEP SLOPE (15-60%)

IV. CRITICAL AREAS: CARE SHALL BE TAKEN TO PROTECT NEARBY AREAS FROM SEDIMENT INFILTRATION. NO FLOODING OR CHANNEL DEGRADATION SHALL RESULT FROM DEVELOPMENT. SPECIAL ATTENTION WILL BE GIVEN TO FILLS OVER 5' IN HEIGHT.

V. GRADING:
DISTURBED EARTH VOLUME: (ESTIMATED)
FILL: 100 CY CUT: 100 CY

VI. PROPOSED CONSTRUCTION DATES:
BEGINNING: JANUARY 2007
FINAL STABILIZATION: FEBRUARY 2007

VII. EROSION CONTROL PLAN:
CLEARING TO BE KEPT TO A MINIMUM. A STONE PAD (CO) TO BE PLACED AT CONSTRUCTION EXIT TO PREVENT MUD TRACKING FROM THE SITE. ALL SLOPES TO BE SURFACE ROUGHENED (SU) TO PREVENT EXCESSIVE WASHING OF SLOPES. VEGETATION AND MULCH (SM2,SM3) WILL BE APPLIED TO APPLICABLE AREAS IMMEDIATELY AFTER GRADING IS COMPLETED. LAND DISTURBING WILL BE SCHEDULED TO LIMIT EXPOSURE OF BARE SOILS TO EROSIVE ELEMENTS.

VIII. SEDIMENT CONTROL PROGRAM:
SEDIMENT CONTROL WILL BE ACCOMPLISHED BY THE INSTALLATION OF REINFORCED SILT FENCE (SF) ALONG TOE OF ALL FILL SLOPES. INLET SEDIMENT TRAPS (SI2) WILL BE USED AT ALL STORM DRAIN INLETS TO PREVENT SILT FROM ENTERING THE STORM DRAIN SYSTEM. VEGETATION AND MULCH (SM2,SM3) WILL BE APPLIED TO APPLICABLE AREAS TO PREVENT DUST AND SEDIMENT FROM LEAVING THESE AREAS. ALL SEDIMENT CONTROL MEASURES SHALL BE IN PLACE PRIOR TO BEGINNING LAND DISTURBING ACTIVITY.

IX. STANDARDS AND SPECIFICATIONS:
ALL DESIGNS WILL CONFORM TO
ALL WORK WILL BE PERFORMED IN ACCORDANCE WITH THE STANDARDS AND SPECIFICATIONS OF THE PUBLICATION ENTITLED "MANUAL FOR EROSION AND SEDIMENT CONTROL IN GEORGIA", LATEST EDITION.

X. MAINTENANCE STATEMENT:
SEDIMENT AND EROSION CONTROL MEASURES WILL BE INSPECTED DAILY. ANY DAMAGE OBSERVED WILL BE REPAIRED BY THE END OF THE DAY. CLEANOUT OF SEDIMENT CONTROL STRUCTURES WILL BE ACCOMPLISHED IN ACCORDANCE WITH THE SPECIFICATIONS AND SEDIMENT DISPOSAL ACCOMPLISHED BY SPREADING ON THE SITE. SEDIMENT BASINS AND BARRIERS WILL REMAIN IN PLACE UNTIL SEDIMENT CONTRIBUTING AREAS ARE STABILIZED. THE SEDIMENT FENCES AND BARRIERS WILL THEN BE REMOVED, AND THE AREAS OCCUPIED BY THESE STRUCTURES VEGETATED. GUIDELINES FOR THE MAINTENANCE OF ESTABLISHED VEGETATION WILL BE PROVIDED TO THE OWNER WHEN ALL DISTURBED AREAS ARE STABILIZED. ADDITIONAL EROSION AND SEDIMENT CONTROL MEASURES WILL BE INSTALLED IF DEEMED NECESSARY BY ON-SITE INSPECTION.

XI. "THE INSTALLATION OF EROSION CONTROL MEASURES AND PRACTICES SHALL TAKE PLACE PRIOR TO OR CONCURRENT WITH LAND DISTURBING ACTIVITIES."
XII. PERMANENT STABILIZATION:
SITE TO BE STABILIZED BY MULCHING AND VEGETATING DISTURBED AREAS WITH GRASS (SEE GRASSING MATS DETAIL)

XIII. "THE INSTALLATION OF EROSION CONTROL MEASURES AND PRACTICES SHALL TAKE PLACE PRIOR TO OR CONCURRENT WITH LAND DISTURBING ACTIVITIES."

XIV. ANY UNTURFED AREA LEFT EXPOSED FOR A PERIOD GREATER THAN 14 DAYS SHALL BE STABILIZED WITH MULCH OR TEMPORARY GRASSING.

XV. EROSION AND SEDIMENTATION CONTROL MEASURES AND PRACTICES SHALL BE MAINTAINED AT ALL TIMES. IF FULL IMPLEMENTATION OF THE APPROVED PLAN DOES NOT PROVIDE FOR EFFECTIVE EROSION AND SEDIMENT CONTROL, ADDITIONAL EROSION AND SEDIMENT CONTROL MEASURES SHALL BE IMPLEMENTED TO CONTROL OR TREAT THE SEDIMENT SOURCE.

XVI. THE ESCAPE OF SEDIMENT FROM THE SITE SHALL BE PREVENTED BY THE INSTALLATION OF EROSION AND SEDIMENT CONTROL MEASURES AND PRACTICES PRIOR, OR CONCURRENT WITH, LAND DISTURBANCE ACTIVITIES

INITIAL EROSION CONTROL — SCI TYPE 'C', CO

INTERMEDIATE EROSION CONTROL — SCI TYPE 'C', RI, DS1, DS2

FINAL EROSION CONTROL — DS3

CONSTRUCTION SCHEDULE
2007

ACTIVITY	JANUARY	FEBRUARY
INSTALL CONSTRUCTION EXITS	■	
INSTALL EROSION CONTROL MEASURES	■	
MAINTAIN EROSION CONTROL MEASURES	■	■
INSTALL TREE PROTECTION FENCING	■	■
PERFORM CLEARING, GRUBBING, AND GRADING	■	
INSTALL SANITARY SEWER SYSTEM	■	■
INSTALL TEMPORARY VEGETATION		■
INSTALL FINAL LANDSCAPING/VEGETATION		■
SITE CLEANUP (CLEAN STORM DRAINS, ETC.)		■

NARRATIVE:

I. DESCRIPTION:
THE SCOPE OF THIS PROJECT IS TO INSTALL A REGIONAL SANITARY SEWER PUMP STATION TO SERVE EXISTING AND PROPOSED RESIDENTIAL AND COMMERCIAL DEVELOPMENTS.
DISTURBED ACREAGE: 5.16 ACRES TO BE DISTURBED
ZONED: VARIOUS ZONINGS

II. EXISTING SITE CONDITIONS:
TOPOGRAPHY: MODERATE TO STEEP SLOPE (5–33%)
VEGETATION: WOODED
DRAINAGE: SEE GRADING AND DRAINAGE PLAN

III. ADJACENT AREAS:
NORTH: UNNAMED BRANCH STEEP SLOPE (15–50%)
EAST: RESIDENTIAL SUBDIVISION SLOPE (5–50%)
WEST: UNNAMED BRANCH STEEP SLOPE (15–50%)
SOUTH: UNNAMED BRANCH STEEP SLOPE (15–50%)

IV. CRITICAL AREAS: CARE SHALL BE TAKEN TO PROTECT NEARBY AREAS FROM SEDIMENT INFILTRATION. NO FLOODING OR CHANNEL DEGRADATION SHALL RESULT FROM DEVELOPMENT. SPECIAL ATTENTION WILL BE GIVEN TO FILLS OVER 5' IN HEIGHT.

V. GRADING:
DISTURBED EARTH VOLUME: (ESTIMATED)
FILL: 100 CY CUT: 100 CY

VI. PROPOSED CONSTRUCTION DATES:
BEGINNING: JANUARY 2007
FINAL STABILIZATION: FEBRUARY 2007

VII. EROSION CONTROL PLAN:
CLEARING TO BE KEPT TO A MINIMUM. A STONE PAD (Co) TO BE PLACED AT CONSTRUCTION EXIT TO PREVENT MUD TRACKING FROM THE SITE. ALL SLOPES TO BE SURFACE ROUGHENED (Su) TO PREVENT EXCESSIVE WASHING OF SLOPES. VEGETATION AND MULCH (Ds2,Ds3) WILL BE APPLIED TO APPLICABLE AREAS IMMEDIATELY AFTER GRADING IS COMPLETED. LAND DISTURBING WILL BE SCHEDULED TO LIMIT EXPOSURE OF BARE SOILS TO EROSIVE ELEMENTS. ALL EROSION CONTROL MEASURES SHALL BE IN PLACE PRIOR TO BEGINNING ANY LAND DISTURBING ACTIVITY.

VIII. SEDIMENT CONTROL PROGRAM:
SEDIMENT CONTROL WILL BE ACCOMPLISHED BY THE INSTALLATION OF REINFORCED SILT FENCE (Sd1) ALONG TOE OF ALL FILL SLOPES. INLET SEDIMENT TRAPS (Sd2) WILL BE USED AT ALL STORM DRAIN INLETS TO PREVENT SILT FROM ENTERING THE STORM DRAIN SYSTEM. VEGETATION AND MULCH (Ds2,Ds3) WILL BE APPLIED TO APPLICABLE AREAS TO PREVENT DUST AND SEDIMENT FROM LEAVING THESE AREAS. ALL SEDIMENT CONTROL MEASURES SHALL BE IN PLACE PRIOR TO BEGINNING LAND DISTURBING ACTIVITY.

IX. STANDARDS AND SPECIFICATIONS:
ALL DESIGNS WILL CONFORM TO
AND ALL WORK WILL BE PERFORMED IN ACCORDANCE WITH THE STANDARDS AND SPECIFICATIONS OF THE PUBLICATION ENTITLED "MANUAL FOR EROSION AND SEDIMENT CONTROL IN GEORGIA", LATEST EDITION.

X. MAINTENANCE STATEMENT:
SEDIMENT AND EROSION CONTROL MEASURES WILL BE INSPECTED DAILY. ANY DAMAGE OBSERVED WILL BE REPAIRED BY THE END OF THE DAY. CLEANOUT OF SEDIMENT CONTROL STRUCTURES WILL BE ACCOMPLISHED IN ACCORDANCE WITH THE SPECIFICATIONS AND SEDIMENT DISPOSAL ACCOMPLISHED BY SPREADING ON THE SITE. SEDIMENT BASINS AND BARRIERS WILL REMAIN IN PLACE UNTIL SEDIMENT CONTRIBUTING AREAS ARE STABILIZED. THE SEDIMENT FENCES AND BARRIERS WILL THEN BE REMOVED, AND THE AREAS OCCUPIED BY THESE STRUCTURES VEGETATED. GUIDELINES FOR THE MAINTENANCE OF ESTABLISHED VEGETATION WILL BE PROVIDED TO THE OWNER WHEN ALL DISTURBED AREAS ARE STABILIZED. ADDITIONAL EROSION AND SEDIMENT CONTROL MEASURES WILL BE INSTALLED IF DEEMED NECESSARY BY ON–SITE INSPECTION.

XI. "THE INSTALLATION OF EROSION CONTROL MEASURES AND PRACTICES SHALL TAKE PLACE PRIOR TO OR CONCURRENT WITH LAND DISTURBING ACTIVITIES."

XII. PERMANENT STABILIZATION:
SITE TO BE STABILIZED BY MULCHING AND VEGETATING DISTURBED AREAS WITH GRASS (SEE GRASSING RATES DETAIL)

XIII. THE INSTALLATION OF EROSION CONTROL MEASURES AND PRACTICES SHALL TAKE PLACE PRIOR TO, OR CONCURRENT WITH, LAND DISTURBING ACTIVITIES.

XIV. ANY DISTURBED AREA LEFT EXPOSED FOR A PERIOD GREATER THAN 14 DAYS SHALL BE STABILIZED WITH MULCH OR TEMPORARY SEEDING.

XV. EROSION AND SEDIMENTATION CONTROL MEASURES AND PRACTICES SHALL BE MAINTAINED AT ALL TIMES. IF FULL IMPLEMENTATION OF THE APPROVED PLAN DOES NOT PROVIDE FOR EFFECTIVE EROSION AND SEDIMENT CONTROL, ADDITIONAL EROSION AND SEDIMENT CONTROL MEASURES SHALL BE IMPLEMENTED TO CONTROL OR TREAT THE SEDIMENT SOURCE.

XVI. THE ESCAPE OF SEDIMENT FROM THE SITE SHALL BE PREVENTED BY THE INSTALLATION OF EROSION AND SEDIMENT CONTROL MEASURES AND PRACTICES PRIOR, OR CONCURRENT WITH, LAND DISTURBANCE ACTIVITIES

INITIAL EROSION CONTROL (Sd1) TYPE "C" (Co)

INTERMEDIATE EROSION CONTROL (Sd1) TYPE "C" (Rt), (Ds1), (Ds2)

FINAL EROSION CONTROL (Ds3)

CONSTRUCTION SCHEDULE

2007

ACTIVITY	*JANUARY*	*FEBRUARY*
INSTALL CONSTRUCTION EXITS		
INSTALL EROSION CONTROL MEASURES		
MAINTAIN EROSION CONTROL MEASURES		
INSTALL TREE PROTECTION FENCING		
PERFORM CLEARING, GRUBBING, AND GRADING		
INSTALL SANITARY SEWER SYSTEM		
INSTALL TEMPORARY VEGETATION		
INSTALL FINAL LANDSCAPING/VEGETATION		
SITE CLEANUP (CLEAN STORM DRAINS, ETC.)		

"I certify that the plan designer has visited the site prior to the design of the erosion and sediment control plans.

"I certify that the permittee's Erosion, Sedimentation and Pollution Control Plan provides for an appropriate and comprehensive system of best management practices required by the Georgia Water Quality Control Act and the document "Manual for Erosion and Sediment Control in Georgia" (Manual) published by the State Soil and Water Conservation Commission as of January 1 of the year in which the land–disturbing activity was permitted, provides for the sampling of the receiving water(s) or the sampling of the storm water outfalls and that the designed system of best management practices and sampling methods is expected to meet the requirements contained in the General NPDES Permit No. GAR 100003."

By: _____ *Date:* _____

Chris M. Patton
Georgia Registered Land Surveyor
No. 2647
LEVEL II CERTIFIED DESIGN PROFESSIONAL
LEVEL II CERTIFICATION #: 4494

GEORGIA REGISTERED No. 2647 LAND SURVEYOR CHRIS M. PATTON

100 0 100 200 400
1 inch = 100 ft.

REVISIONS

No.	DATE	REMARKS
1.	2/15	REVISE ROUTE/ ADD UTILITIES
2.	4/25	PER COMMENTS

SEAL

GEORGIA REGISTERED No. 18702 PROFESSIONAL ENGINEER PAUL S. BOYER

THIS DRAWING, AS AN INSTRUMENT OF SERVICE, IS AND SHALL REMAIN THE PROPERTY OF THE ENGINEER AND SHALL NOT BE REPRODUCED, PUBLISHED, OR USED IN ANY WAY WITHOUT THE PERMISSION OF THE ENGINEER.

THE CONTRACTOR SHALL VERIFY ALL DIMENSIONS AND EXISTING CONDITIONS AT THE SITE BEFORE PROCEEDING WITH EACH PHASE OF THE WORK.

Patton – Boyer, Inc.
LAND SURVEYORS & CIVIL ENGINEERS
909 ATLANTA HWY. 30501
GAINESVILLE, GEORGIA
PHONE (770) 532 – 6492
FAX (770) 532 – 1995

EROSION CONTROL PLAN
FOR
WALTON POND PUMP STATION
LAND LOTS 156 & 184 ~ 4th LAND DISTRICT
CITY OF LOGANVILLE WALTON COUNTY, GEORGIA

SHEET NUMBER
C18 24
OF

SCALE
1" = 100'

DATE
12/28/06

PROJECT NO.
03–243.09

MAGNETIC

REVISIONS

No.	DATE	REMARKS
1.	2/15	REVISE ROUTE/ ADD UTILITIES
2.	4/25	PER COMMENTS

SEAL

GEORGIA REGISTERED No. 18702 PROFESSIONAL ENGINEER PAUL S. BOYER

THIS DRAWING, AS AN INSTRUMENT OF SERVICE, IS AND SHALL REMAIN THE PROPERTY OF THE ENGINEER AND SHALL NOT BE REPRODUCED, PUBLISHED, OR USED IN ANY WAY WITHOUT THE PERMISSION OF THE ENGINEER.

THE CONTRACTOR SHALL VERIFY ALL DIMENSIONS AND EXISTING CONDITIONS AT THE SITE BEFORE PROCEEDING WITH EACH PHASE OF THE WORK.

Patton - Boyer, Inc.
LAND SURVEYORS & CIVIL ENGINEERS
909 ATLANTA HWY.
GAINESVILLE, GEORGIA 30501
PHONE (770) 532 - 6492
FAX (770) 532 - 1995

STATE WATERS BUFFER:

A 25 FOOT UNDISTURBED VEGETATIVE BUFFER, ADJACENT TO ALL RUNNING STREAMS WILL BE LEFT AND MAINTAINED.

THIS SITE DOES CONTAIN STATE WATERS REQUIRING AN UNDISTURBED VEGETATIVE BUFFER.

Wetlands Certification:

The design professional whose seal appears herein certifies the following: (1) the National Wetlands Inventory Map has been consulted; (2) the appropriate plan sheet

☐ DOES ☑ DOES NOT

indicate wetlands as shown on the map; and (3) if wetlands are indicated the landowner or developer has been advised that land disturbance of protected wetlands shall not occur unless the appropriate Section 404 Permit or Letter of

FLOOD INFORMATION:

A PORTION OF THIS LOCATED WITHIN ZONE A, AREAS OF 100-YEAR FLOOD PLAIN AS PER F.I.R.M. FLOOD INSURANCE RATE MAP OF WALTON COUNTY, GEORGIA. COMMUNITY PANEL NO. 13297 C0060B EFFECTIVE DATE: 2/16/1990

CONTOUR INFORMATION:

CONTOURS SHOWN HEREON WERE COMPILED BY JACK W. BERRY & ASSOCIATES, Inc., USING STEREOPHOTOGRAMMETRIC METHODS.
DATE OF PHOTOGRAPHY: APRIL 3, 2004
CONTOUR INTERVAL: 2 FEET
CONTOUR DATUM: MEAN-SEA LEVEL

SOILS INFORMATION:

SOIL INFORMATION TAKEN FROM SOIL SURVEY FOR WALTON COUNTY

SOILS INFORMATION:

Soil Symbol	Soil Series	Slope	Erodibility	Permeability (in./ Hrs.)	Depth to Bedrock	Depth to Water Table	K Factor	Texture	Drainage
Alm	Alluvial Land	2–6 %	Severely	0.6–0.2	>72"	60"	.32	Sandy	Moderately Good
Alp	Alluvial Land, Mod. Wet	2–6 %	Moderate	2.0–6.0	>72"	0–30"	.32	Sandy	Poor
AnB3	Appling	2–6 %	Severely	0.6–2.0	>72"	>72"	.28	Sandy Clay Loam	Favorable
AnC3	Appling	6–10 %	Severely	0.6–2.0	>72"	60"	.28	Sandy Clay Loam	Favorable
AnD3	Appling	10–15 %	Severely	0.6–2.0	>72"	>8–20"	.28	Sandy Clay Loam	Favorable
AxB	Appling	2–6 %	Slight	0.6–2.0	>72"	>72"	.28	Coarse Sandy Loam	Favorable
AxB2	Appling	2–6 %	Moderate	0.6–2.0	>60"	>72"	.28	Coarse Sandy Loam	Favorable
AxC2	Appling	6–10 %	Moderate	0.6–2.0	48–63"	>72"	.28	Coarse Sandy Loam	Favorable
AxD2	Appling	10–15 %	Moderate	0.6–2.0	>72"	30–48"	.28	Coarse Sandy Loam	Favorable
CfB	Colfax	2–6 %	Slight	2.0–6.0	>60"	48–60"	.32	Sandy Loam	Poor
CZB3	Cecil	2–6 %	Severely	2.0–6.0	>10'	>5'	.28	Sandy Clay Loam	Favorable
CZC3	Cecil	6–10 %	Severely	2.0–6.0	>10'	>5'	.28	Sandy Clay Loam	Favorable
CZD3	Cecil	10–15 %	Severely	2.0–6.0	>10'	>5'	.28	Sandy Clay Loam	Favorable
CZD4	Cecil–Gullied Land	10–15 %	Severely	2.0–6.0	>10'	>5'	.28	Sandy Clay Loam	Favorable
DjB	Durham	2–6 %	Slight	2.0–6.0	>72"	>36"	.28	Loamy Coarse Sand	Well Drained
LCB	Louisburg	2–6 %	Slight	0.6–2.0	18"–48"	>60"	.28	Loamy Coarse Sand	Well Drained
LCC	Louisburg	6–10 %	Slight	0.6–2.0	18"–48"	>60"	.28	Loamy Coarse Sand	Well Drained
LCD	Louisburg	10–15 %	Slight	0.6–2.0	18"–48"	>60"	.28	Loamy Coarse Sand	Well Drained
MIC3	Madison	6–10 %	Severely	2.0–6.0	>72"	>60"	.28	Sandy Clay Loam	Seasonal High Water Table

300 0 300 600 1200

1 inch = 300 ft.

SOILS MAP
FOR
WALTON POND PUMP STATION
LAND LOTS 156 & 184 ~ 4th LAND DISTRICT
CITY OF LOGANVILLE WALTON COUNTY, GEORGIA

SHEET NUMBER
C19 24
OF

SCALE
1" = 300'

DATE
12/28/06

PROJECT NO.
03-243.09

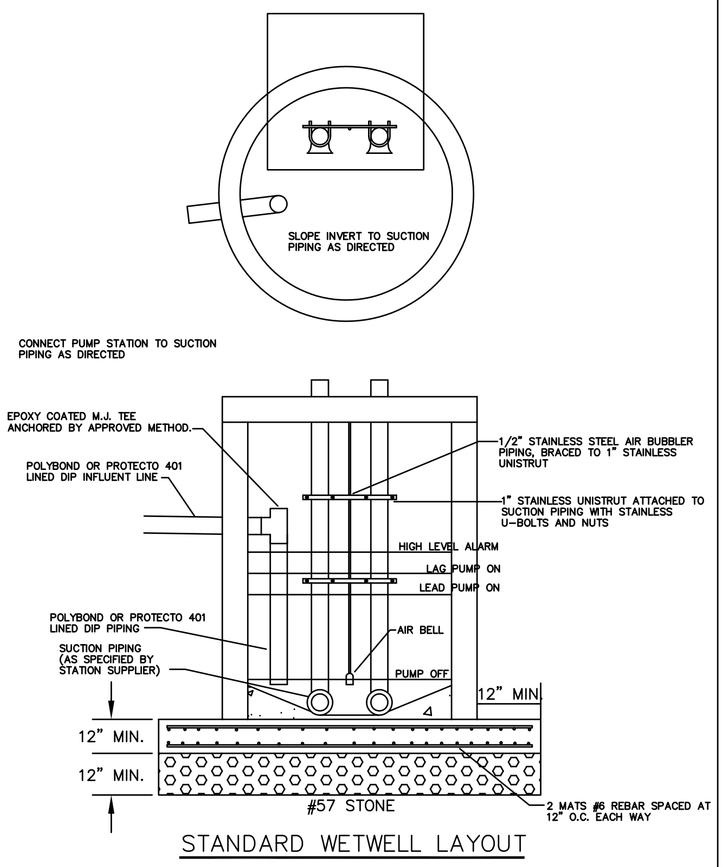

STANDARD WETWELL LAYOUT

NOTES:

- PUMP STATION DESIGN SHALL BE SUBMITTED FOR APPROVAL PRIOR TO INSTALLATION
- ELECTRICAL CONDUIT SHALL BE INSTALLED AS DIRECTED BY THE OWNER. INSTALLATION SHALL BE INSPECTED BY CITY PERSONELL PRIOR TO POURING SLAB.
- THE PUMP STATION PAD AND GENERATOR PAD SHALL BE CONSTRUCTED IN ACCORDANCE WITH THE MANUFACTURER'S SPECIFICATIONS, WITH APPROVAL FROM THE CITY.

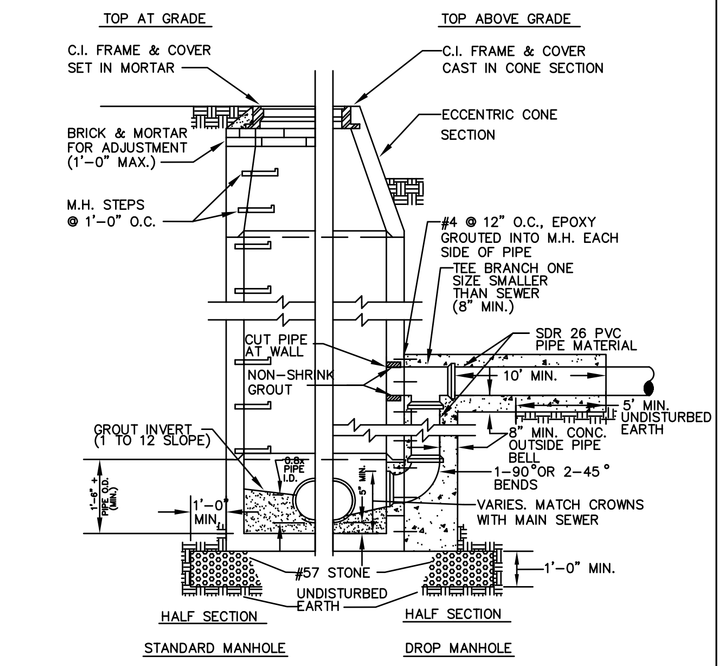

PRECAST CONCRETE MANHOLE DETAIL

NOTE:

RUBBER BOOTS REQUIRED AT ALL PIPE CONNECTIONS TO MANHOLE WITH THE EXCEPTION OF DROP CONNECTIONS.

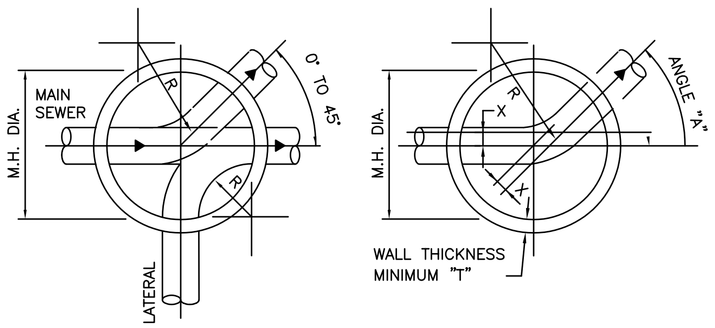

STANDARD MANHOLE SCHEDULE OF GOVERNING DIMENSIONS				
PIPE SIZE	ANGLE "A"	MH. DIA.	"T"	"X"
8" TO 12"	0° TO 90°	4'-0"	5"	0"
15" TO 18"	60° TO 90°	5'-0"	6"	6"
24" TO 36"	0° TO 90°	6'-0"	7"	0"

NOTE:
MINIMUM ℄ RADIUS (R) OF M.H. INVERT = 1.5 x PIPE DIAMETER

TYPICAL PLANS

STANDARD MANHOLE DETAIL

N.T.S.

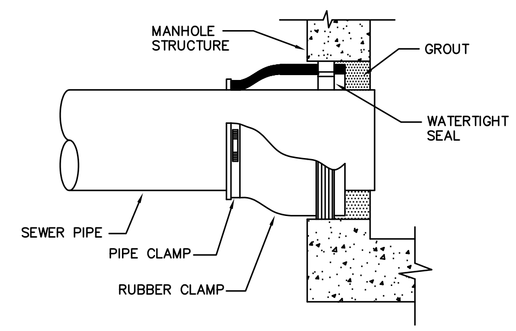

RUBBER BOOT DETAIL

N.T.S.

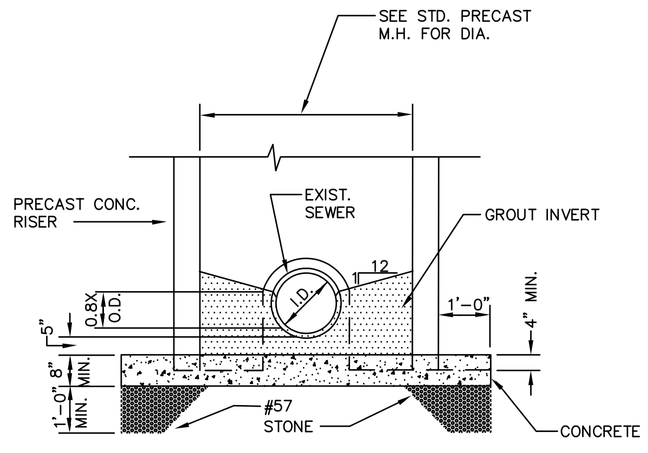

PRECAST MANHOLE

OVER EXISTING SEWER DETAIL

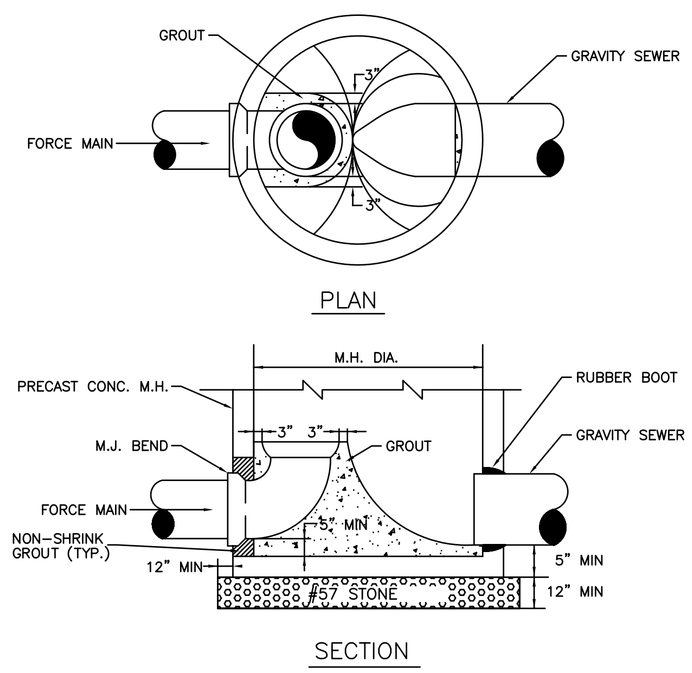

FORCE MAIN CONNECTION DETAIL

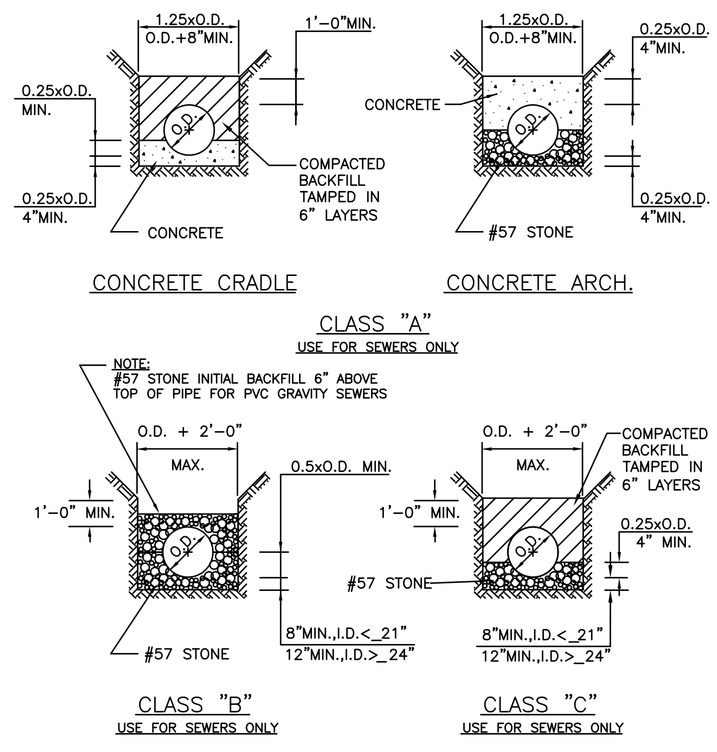

PIPE BEDDING AND HAUNCHING DETAILS

N.T.S.

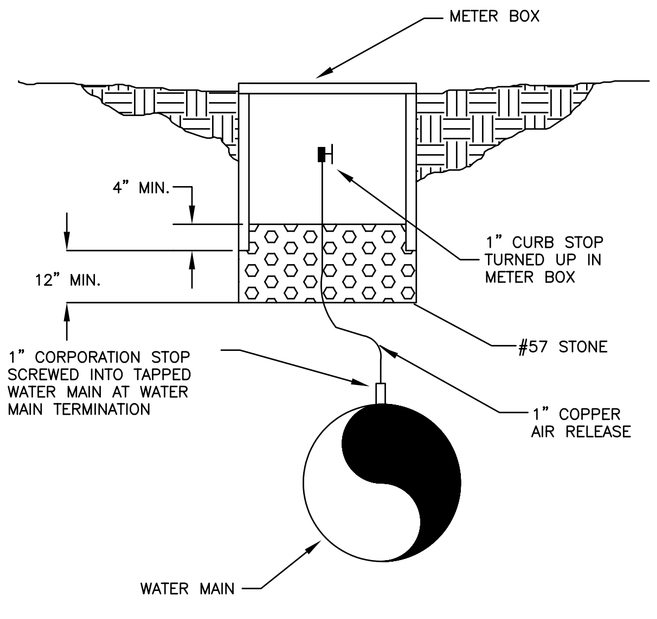

MANUAL AIR RELEASE VALVE

REVISIONS

No.	DATE	REMARKS
1.	2/15	REVISE ROUTE/ ADD UTILITIES
2.	4/25	PER COMMENTS

SEAL

GEORGIA REGISTERED No. 18702 PROFESSIONAL ENGINEER PAUL S. BOYTER

THIS DRAWING, AS AN INSTRUMENT OF SERVICE, IS AND SHALL REMAIN THE PROPERTY OF THE ENGINEER AND SHALL NOT BE REPRODUCED, PUBLISHED, OR USED IN ANY WAY WITHOUT THE PERMISSION OF THE ENGINEER.

THE CONTRACTOR SHALL VERIFY ALL DIMENSIONS AND EXISTING CONDITIONS AT THE SITE BEFORE PROCEEDING WITH EACH PHASE OF THE WORK.

Patton-Boyter, Inc.
LAND SURVEYORS & CIVIL ENGINEERS
909 ATLANTA HWY.
GAINESVILLE, GEORGIA 30501
PHONE (770) 532 - 6492
FAX (770) 532 - 1995

SANITARY SEWER DETAILS FOR
WALTON POND PUMP STATION
LAND LOTS 156 & 184 ~ 4th LAND DISTRICT
CITY OF LOGANVILLE WALTON COUNTY, GEORGIA

SHEET NUMBER
C2024
OF

SCALE
1" = 50'

DATE
12/28/06

PROJECT NO.
03-243.09

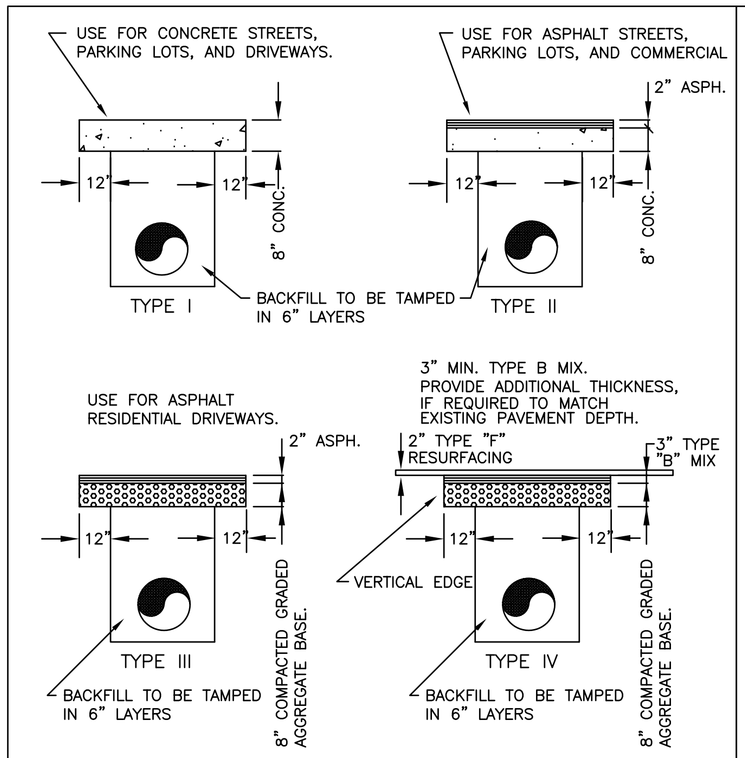

PAVEMENT REPLACEMENT DETAILS

N.T.S.

NOTE: USE 8" COMPACTED GRADED AGGREGATE BASE FOR REPLACEMENT AT GRAVEL DRIVES.

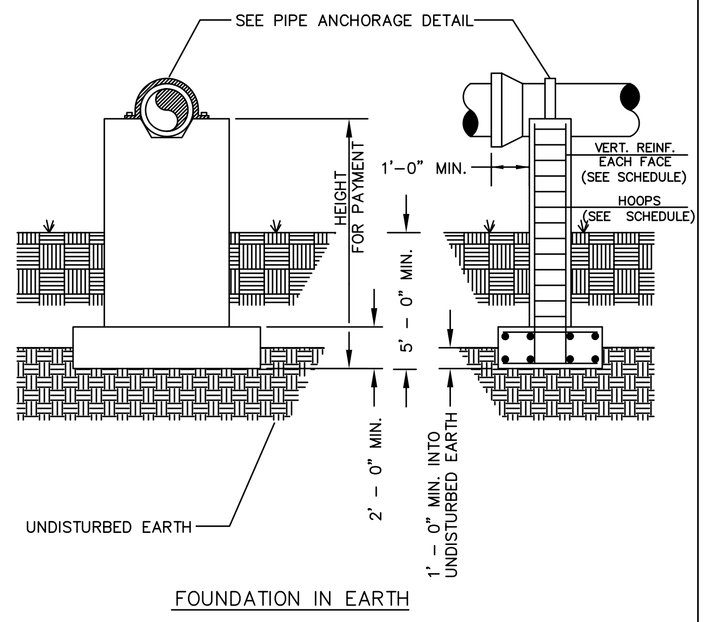

FOUNDATION IN EARTH

CONCRETE PIER DETAILS

N.T.S.

NOTES:

1. FOOTING REINF. SAME AS VERT. REINF. EA. WAY TOP & BOTTOM

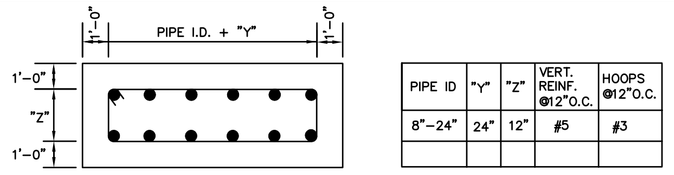

PIER PLAN

PIPE ID	"Y"	"Z"	VERT. REINF. @12"O.C.	HOOPS @12"O.C.
8"-24"	24"	12"	#5	#3

PIER SCHEDULE

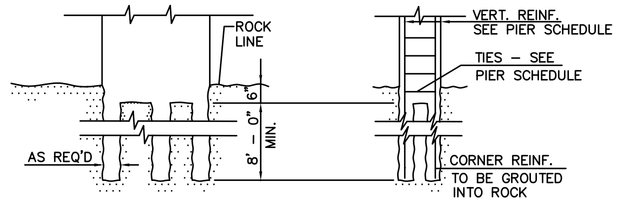

FOUNDATION IN ROCK

CONCRETE PIER DETAILS

N.T.S.

NOTES:

1. FOOTING REINF. SAME AS VERT. REINF. EA. WAY TOP & BOTTOM
2. WHEN BASE IS IN ROCK, OMIT FOOTING & GROUT VERT. CORNER BARS 8' INTO ROCK
3. THE ROCK ANCHOR SHALL BE EMBEDDED INTO ROCK DEVELOP THE FULL CAPACITY OF THE REBAR.

REVISIONS

No.	DATE	REMARKS
1.	2/15	REVISE ROUTE/ ADD UTILITIES
2.	4/25	PER COMMENTS

SEAL

GEORGIA REGISTERED No. 18702 PROFESSIONAL ENGINEER PAUL S. BOYER

THIS DRAWING, AS AN INSTRUMENT OF SERVICE, IS AND SHALL REMAIN THE PROPERTY OF THE ENGINEER AND SHALL NOT BE REPRODUCED, PUBLISHED, OR USED IN ANY WAY WITHOUT THE PERMISSION OF THE ENGINEER.

THE CONTRACTOR SHALL VERIFY ALL DIMENSIONS AND EXISTING CONDITIONS AT THE SITE BEFORE PROCEEDING WITH EACH PHASE OF THE WORK.

Patton - Boyer, Inc.
LAND SURVEYORS & CIVIL ENGINEERS
909 ATLANTA HWY.
GAINESVILLE, GEORGIA 30501
PHONE (770) 532 - 6492
FAX (770) 532 - 1995

SANITARY SEWER DETAILS FOR
WALTON POND PUMP STATION
LAND LOTS 156 & 184 ~ 4th LAND DISTRICT
CITY OF LOGANVILLE WALTON COUNTY, GEORGIA

SHEET NUMBER
C2124
OF

SCALE
1" = 50'

DATE
12/28/06

PROJECT NO.
03-243.09

THE FOLLOWING CALCULATIONS ARE BASED ON THE WETWELL CONFIGURATION SHOWN THESE DRAWINGS.

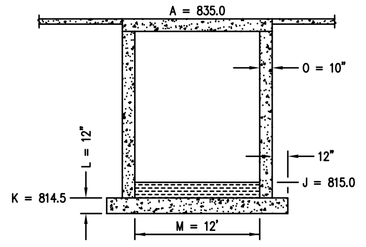

ASSUMPTIONS

1. FRICTION BETWEEN THE SOIL AND WALLS IS IGNORED.
2. STRUCTURE WEIGHT IS BASED ON THE WEIGHT OF THE WETWELL RISER AND BASE SECTIONS AND PUMP BASE FILL ONLY. WEIGHT OF PUMPS, PIPING, TOP, ETC. ARE IGNORED.
3. MATERIAL SPECIFIC WEIGHTS:
   WATER = 62.4 PCF
   CONCRETE = 150 PCF
   SOIL = 100 PCF

STRUCTURE

VOLUME OF RISER SECTIONS: V_s = (AREA OF OUTSIDE WALL − AREA OF INSIDE WALL) x HEIGHT OF RISERS
= $(P/4) \times [(M + 2 \times O/12)^2 - M^2] \times (A - K)$
= $(3.14/4) \times [(12 + 2 \times 10/12)^2 - 6^2] \times (835.0 - 814.5)$ = 282.5 CF

VOLUME OF BASE SECTION: V_b = AREA OF BASE x BASE THICKNESS
= $(P/4) \times [M + 2 \times (12 + O)/12]^2 \times L/12$
= $(3.14/4) \times [12 + 2 \times (12 + 10)/12]^2 \times 12/12$ = 73.4 CF

VOLUME OF FILL: V_f = AREA OF INSIDE DIAM. x FILL DEPTH
= $(P/4) \times M^2 \times (J - K)$
= $(3.14/4) \times 12^2 \times (815.0 - 814.5)$ = 14.1 CF

WEIGHT OF CONCRETE: $W_c = (V_s + V_b + V_f) \times g_c = (282.5 + 73.4 + 14.1) \times 150$ = 55,499 LBS

SOIL

VOLUME OF SOIL OVER BASE: V_s = (AREA OF BASE − AREA OF OUTSIDE WALL) x HEIGHT OF RISERS
= $(P/4) \times [(M + 2 \times (12 + O)/12)^2 - (M + 2 \times O/12)^2] \times (A - K)$
= $(3.14/4) \times [(12 + 2 \times (12 + 10)/12)^2 - (12 + 2 \times 10/12)^2] \times (835.0 - 814.5)$
= 430.0 CF

WEIGHT OF SOIL OVER BASE: $W_s = V_s \times g_c = 430.0 \times 100$ = 42,997 LBS

WATER

VOLUME OF WATER DISPLACED: V_w = AREA OF OUTSIDE WALL x HEIGHT OF RISERS + VOLUME OF BASE
= $(P/4) \times (M + 2 \times O/12)^2 \times (A - K) + V_b$
= $(3.14/4) \times (12 + 2 \times 10/12)^2 \times (835.0 - 814.5) + 73.4$ = 802.4 CF

WEIGHT OF WATER DISPLACED: $W_w = V_w \times g_w = 802.4 \times 62.4$ = 50,068 LBS

FLOATATION CHECK

FACTOR OF SAFETY: F_s = TOTAL WEIGHT OF STRUCTURE AND SOIL / WEIGHT OF WATER DISPLACED
= $(W_c + W_s) / W_w$
= (55,499 + 42,997) / 50,068 = 1.97 ——— $F_s > 1.0$ ∴ WETWELL WILL NOT FLOAT

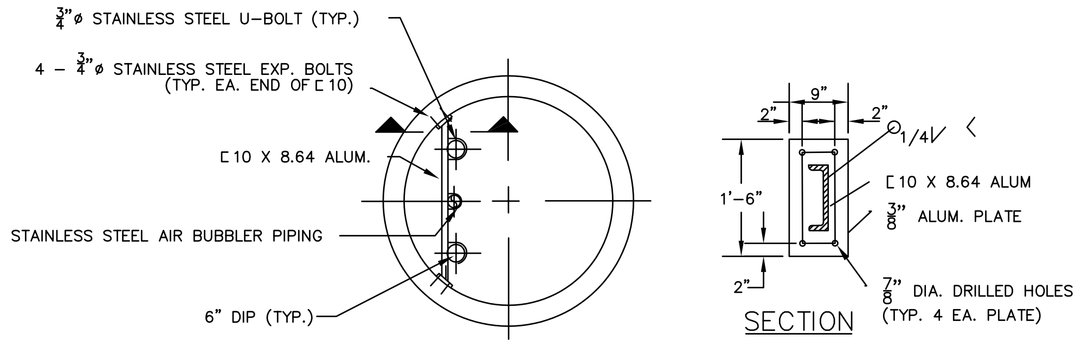

SECTION

NOTE:
SEE PLANS FOR ORIENTATION AND PIPE SIZES

PIPE SUPPORT DETAIL
N.T.S.

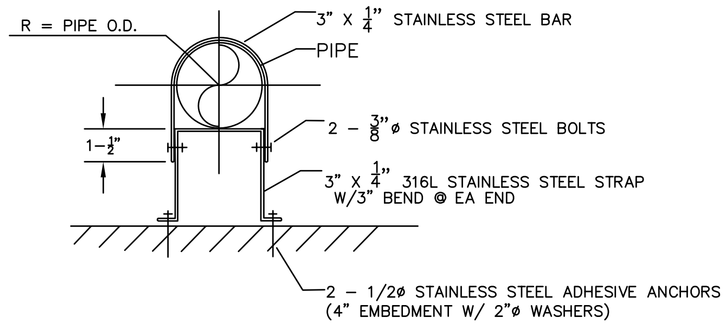

PIPE SUPPORT DETAIL
N.T.S

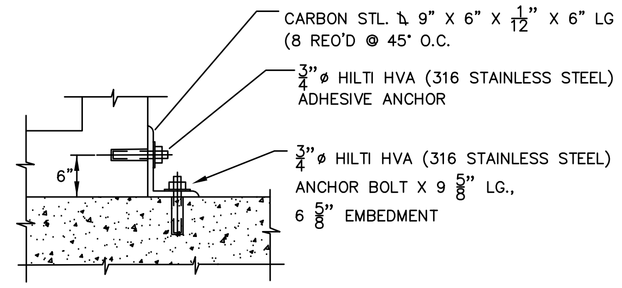

MANHOLE ANCHOR DETAIL
N.T.S

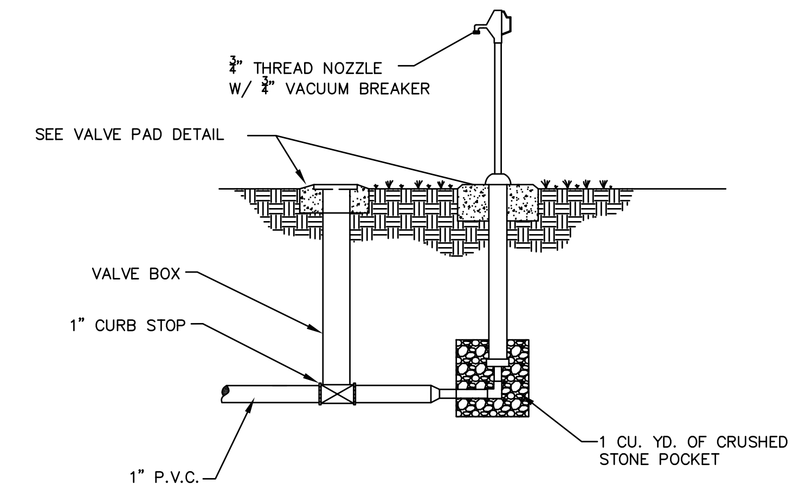

LEVER TYPE YARD HYDRANT DETAIL
N.T.S.

REVISIONS

No.	DATE	REMARKS
1.	2/15	REVISE ROUTE/ ADD UTILITIES
2.	4/25	PER COMMENTS

SEAL

GEORGIA REGISTERED No. 18702 PROFESSIONAL ENGINEER PAUL S. BOYER

THIS DRAWING, AS AN INSTRUMENT OF SERVICE, IS AND SHALL REMAIN THE PROPERTY OF THE ENGINEER AND SHALL NOT BE REPRODUCED, PUBLISHED, OR USED IN ANY WAY WITHOUT THE PERMISSION OF THE ENGINEER.

THE CONTRACTOR SHALL VERIFY ALL DIMENSIONS AND EXISTING CONDITIONS AT THE SITE BEFORE PROCEEDING WITH EACH PHASE OF THE WORK.

Patton - Boyer, Inc.
LAND SURVEYORS & CIVIL ENGINEERS
909 ATLANTA HWY.
GAINESVILLE, GEORGIA 30501
PHONE (770) 532 – 6492
FAX (770) 532 – 1995

PUMP STATION DETAILS
FOR
WALTON POND PUMP STATION
LAND LOTS 156 & 184 ~ 4th LAND DISTRICT
CITY OF LOGANVILLE WALTON COUNTY, GEORGIA

SHEET NUMBER C22 24 OF

SCALE N.T.S.

DATE 12/28/06

PROJECT NO. 03–243.09

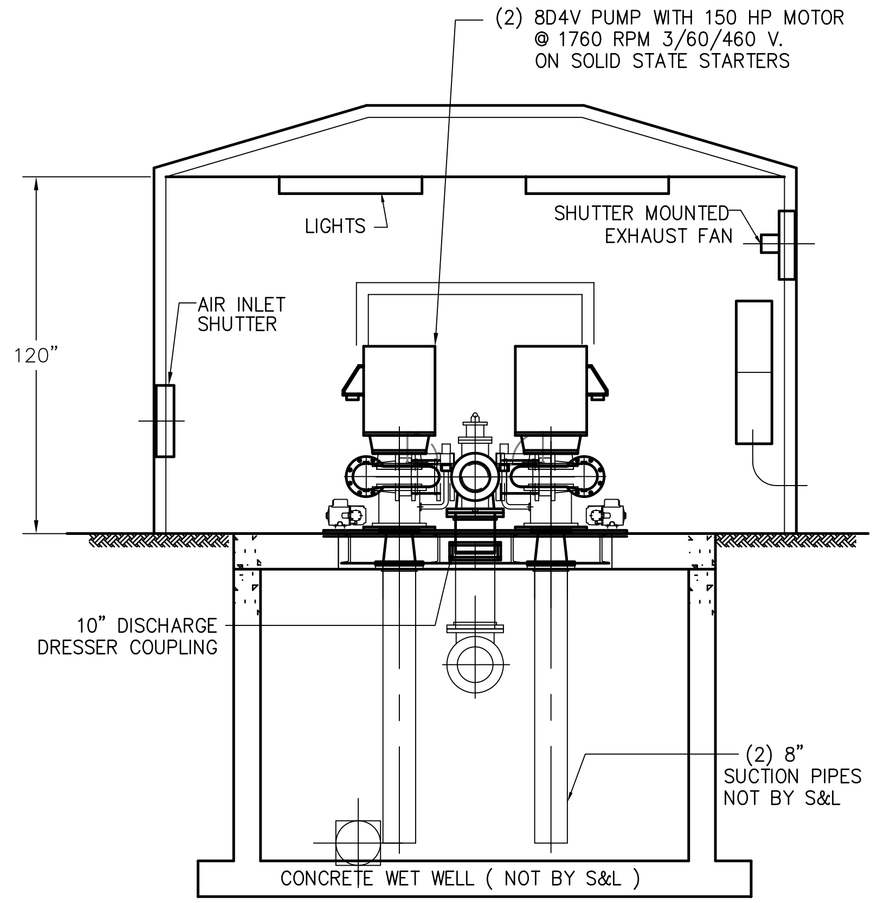

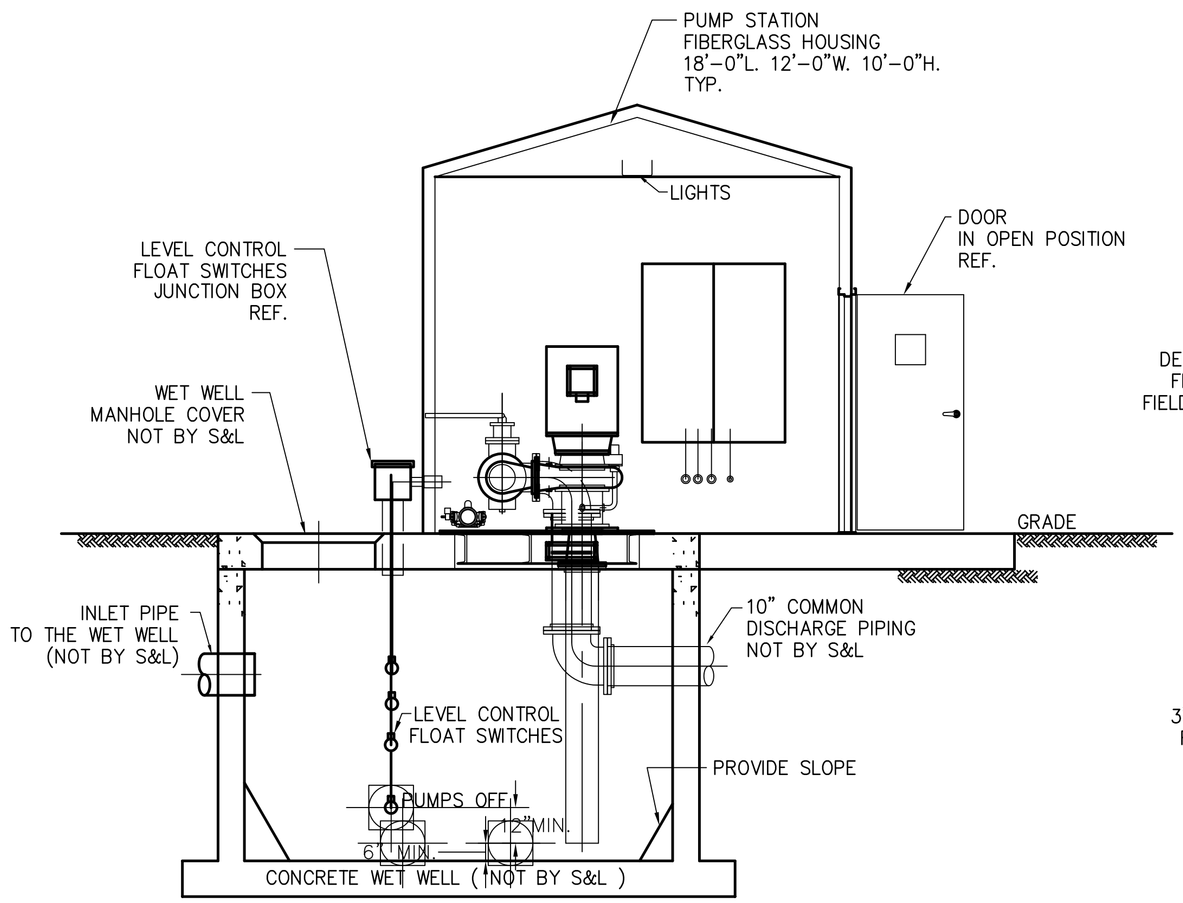

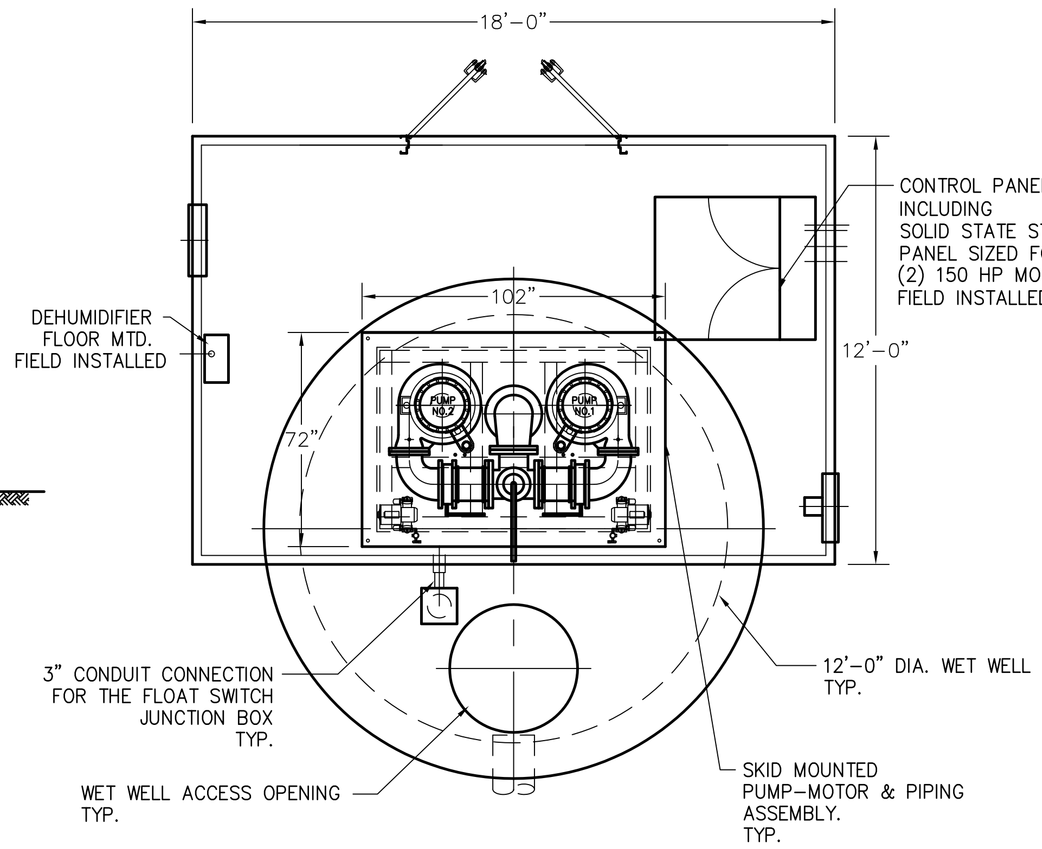

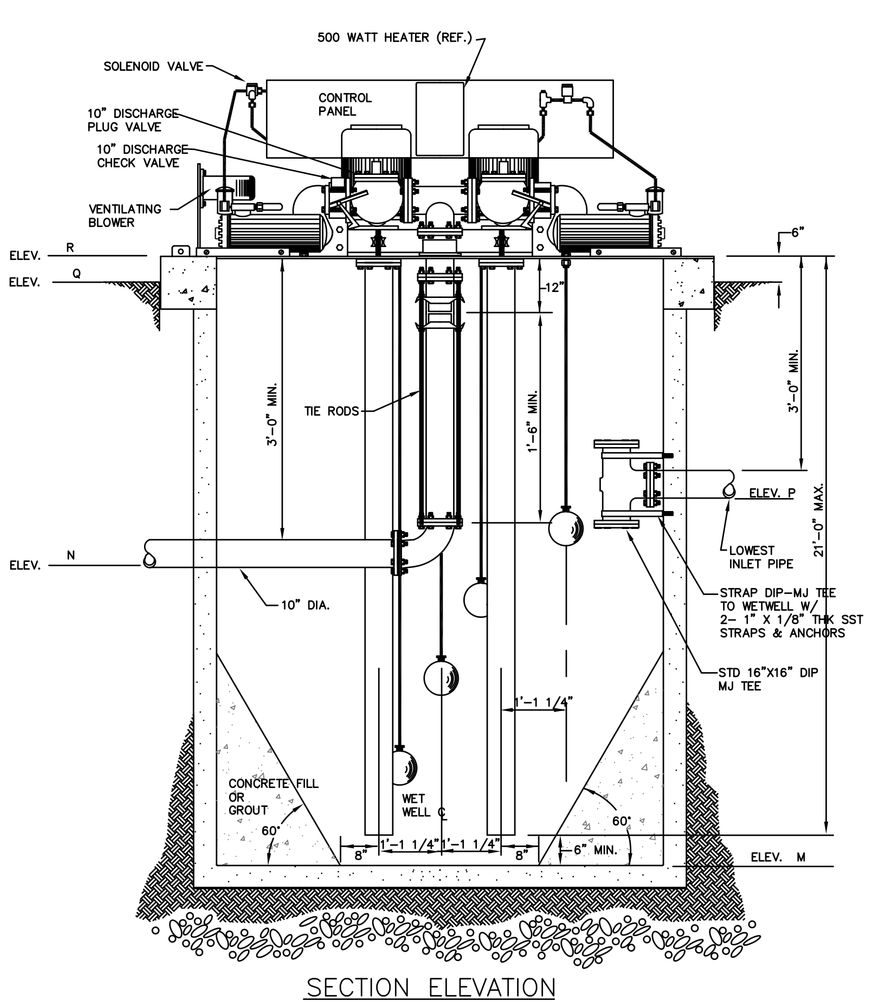

SECTION ELEVATION

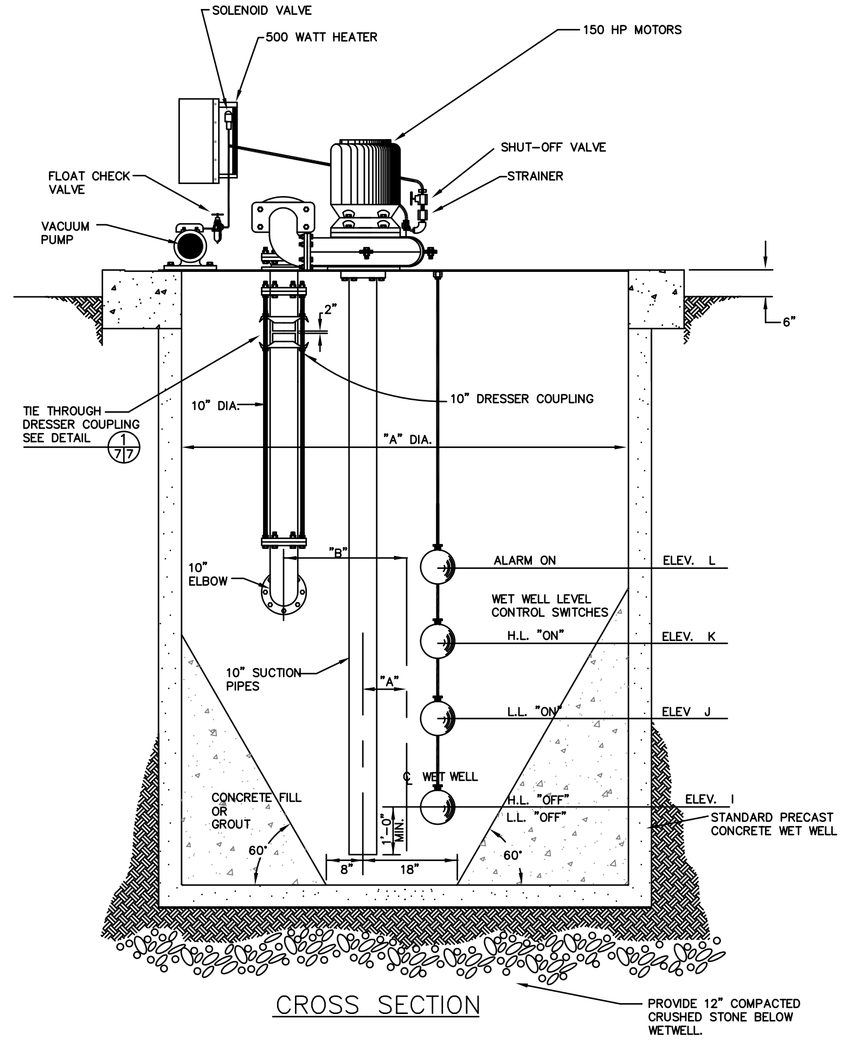

CROSS SECTION

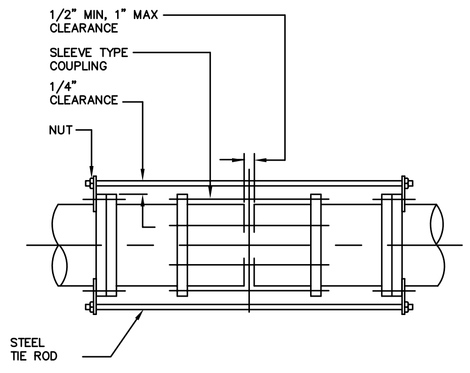

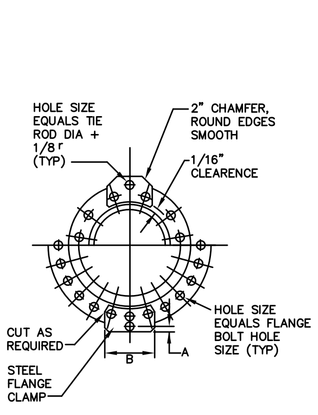

NOTES

1. TIE RODS SHALL BE EQUALLY SPACED AROUND PIPE.
2. FOR STEEL FLANGE CLAMPS REQUIRING 3 BOLTS PER CLAMP, THE ORIENTATION OF THE STEEL FLANGE CLAMP AND PIPE FLANGE DRILLING IS PICTORIAL ONLY, EXACT ORIENTATION OF THE FLANGE CLAMP IS DETERMINED BY STANDARD FLANGE DRILLING.

SLEEVE COUPLING RESTRAINT FOR DUCTILE IRON PIPE DETAIL 7/7

	TIERODS		FLANGE CLAMP			
PIPE SIZE	NO	DIA	THICKNESS	NO OF FLANGE BOLTS PER CLAMP	"A"	"B"
10	4	1/2"	1/2"	2	2"	2"

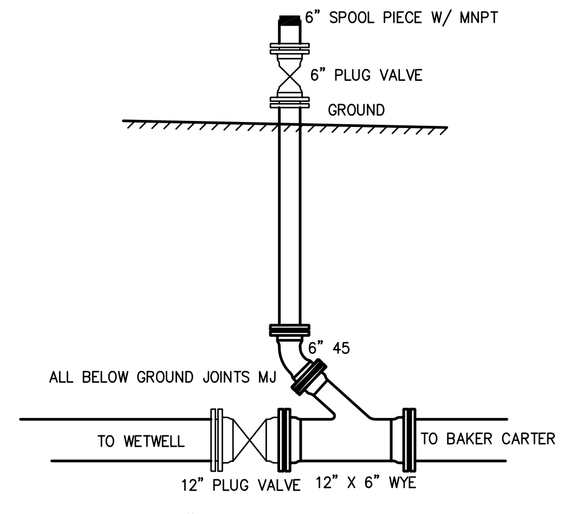

6" WYE CONNECTION

NOTE:
SEE MANUFACTURER SHOP DRAWINGS BEFORE FABRICATION OF WETWELL. PIPING, VALVE ARRANGEMENT AND LOCATION MAY BE DIFFERENT THAN INDICATED.

PUMP STATION DATA

LOCATION	REQUIREMENTS										ELEVATIONS									WETWELL DIAMETER	POWER	STANDBY POWER UNIT MIN. SIZE	COMMENTS
	TDH			* GPM	RPM	HP	SUCT.	DISCH.	MIN. EFF.	SPH SIZE	I	J	K	L	M	N	P	Q	R				
	DES.	MAX.	MIN.																				
New Horizon Subd.	220	218	172	1400	1760	150	10"	10"	61.5%	3"	816.50	820.50	821.00	821.50	815.00	831.00	822.00	834.50	835.00	12' – 0"	460/60/3	N/A	

* EACH PUMP

WET WELL MOUNTED DATA

A DIA	A	B	C	D	E	F	
5'-0"	6"	22 1/16"	34"	68"	40 7/8"	45 3/8"	
12'-0"	0"	16 1/16"	80"	160"	34 7/8"	39 3/8"	

REVISIONS

No.	DATE	REMARKS
1.	2/15	REVISE ROUTE/ ADD UTILITIES
2.	4/25	PER COMMENTS

SEAL

GEORGIA REGISTERED No. 18702 PROFESSIONAL ENGINEER PAUL S. BOYER

THIS DRAWING, AS AN INSTRUMENT OF SERVICE, IS AND SHALL REMAIN THE PROPERTY OF THE ENGINEER AND SHALL NOT BE REPRODUCED, PUBLISHED, OR USED IN ANY WAY WITHOUT THE PERMISSION OF THE ENGINEER.

THE CONTRACTOR SHALL VERIFY ALL DIMENSIONS AND EXISTING CONDITIONS AT THE SITE BEFORE PROCEEDING WITH EACH PHASE OF THE WORK.

Patton - Boyer, Inc.
LAND SURVEYORS & CIVIL ENGINEERS
909 ATLANTA HWY.
GAINESVILLE, GEORGIA 30501
PHONE (770) 532 - 6492
FAX (770) 532 - 1995

PUMP STATION DETAILS
FOR
WALTON POND PUMP STATION
LAND LOTS 156 & 184 ~ 4th LAND DISTRICT
CITY OF LOGANVILLE WALTON COUNTY, GEORGIA

SHEET NUMBER
C2324
OF

SCALE
N.T.S.

DATE
12/28/06

PROJECT NO.
03-243.09

CODE	PRACTICE	DETAIL	MAP SYMBOL	DESCRIPTION
Cd	CHECKDAMS			A SMALL TEMPORARY BARRIER OR DAM CONSTRUCTED ACROSS A SWALE, DRAINAGE DITCH OR AREA OF CONCENTRATED FLOW.
Co	CONSTRUCTION EXIT		Co	A CRUSHED STONE PAD LOCATED AT THE CONSTRUC-TION SITE EXIT TO PROVIDE A PLACE FOR REMOVING MUD FROM TIRES THEREBY PROTECTING PUBLIC STREETS.
Ds1	DISTURBED AREA STABILIZATION (WITH MULCHING ONLY)		Ds1	ESTABLISHING TEMPORARY PROTECTION FOR DISTURBED AREAS WHERE SEEDINGS MAY NOT HAVE A SUITABLE GROWING SEASON TO PRODUCE AN EROSION RETARDING COVER.
Ds2	DISTURBED AREA STABILIZATION (WITH TEMPORARY SEEDING)		Ds2	ESTABLISHING A TEMPORARY VEGETATIVE COVER WITH FAST GROWING SEEDINGS ON DISTURBED AREAS.
Ds3	DISTURBED AREA STABILIZATION (WITH PERMANENT VEGETATION)		Ds3	ESTABLISHING PERMANENT VEGETATIVE COVER SUCH AS TREES, SHRUBS, VINES, GRASSES, SOD, OR LEGUMES ON DISTURBED AREAS.
Rt	RETROFITTING		Rt	A DEVICE OR STRUCTURE PLACED IN FRONT OF A PERMA-NENT STORMWATER DETENTION POND OUTLET STRUCTURE TO SERVE AS A TEMPORARY SEDI-MENT FILTER.
Sd1	SEDIMENT BARRIER		TYPE "C"	A BARRIER TO PREVENT SEDIMENT FROM LEAVING THE CONSTRUCTION SITE. IT MAY BE SANDBAGS, BALES OF STRAW OR HAY, BRUSH, LOGS AND POLES, GRAVEL, OR A SEDIMENT FENCE. THE BARRIERS ARE USUALLY TEMPORARY AND INEXPENSIVE.

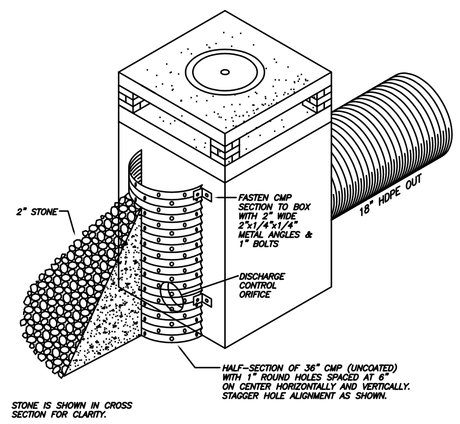

Rt

TO BE ATTACHED TO DISCHARGE CONTROL STRUCTURE

LOCATION

A TEMPORARY CONSTRUCTION EXIT SHALL BE LOCATED AT EVERY ACCESS/EGRESS POINT OF THE CONSTRUCTION SITE WHERE EQUIPMENT AND/OR TRAFFIC LEAVES THE CONSTRUCTION AREA AND ENTERS A PUBLIC ROAD OR EXISTING PAVED AREA OF THE SITE WHICH IS NOT INVOLVED IN THE CURRENT PROJECT.

SIZE

WIDTH – THE TEMPORARY CONSTRUCTION EXIT SHALL HAVE A MINIMUM WIDTH OF 30 FEET BUT SHALL NOT BE LESS THAN THE FULL WIDTH OF THE VEHICULAR ACCESS AREA.
LENGTH – MINIMUM LENGTH OF 50 FEET.

MAINTENANCE REQUIREMENTS

THE TEMPORARY CONSTRUCTION EXIT SHALL BE MAINTAINED IN A CONDITION WHICH WILL PREVENT TRACKING OR THE FLOW OF MUD ONTO PUBLIC RIGHTS-OF-WAY OR UNDISTURBED PAVED AREAS. THE EXIT MAY REQUIRE PERIODIC DRESSING WITH FRESH AND CLEAN #2 STONE AS CONDITIONS DICTATE. ALL MATERIALS (MUD, SOIL, SEDIMENT, ETC) SPILLED, DROPPED, WASHED, OR TRACKED FROM THE CONSTRUCTION AREA ONTO ROADWAYS AND OTHER PAVED AREAS SHALL BE REMOVED IMMEDIATELY.

GENERAL

WHEELS MUST BE CLEANED TO REMOVE MUD AND OTHER DEBRIS PRIOR TO ENTERING ONTO PAVED AREAS. WHEN WASHING OF EQUIPMENT AND / OR VEHICLES IS REQUIRED, IT SHALL BE DONE IN AN AREA STAAILIZED WITH CRUSHED STONE WHICH DRAINS INTO AN APPROVED SEDIMENT TRAP OR SEDIMENT BASIN.

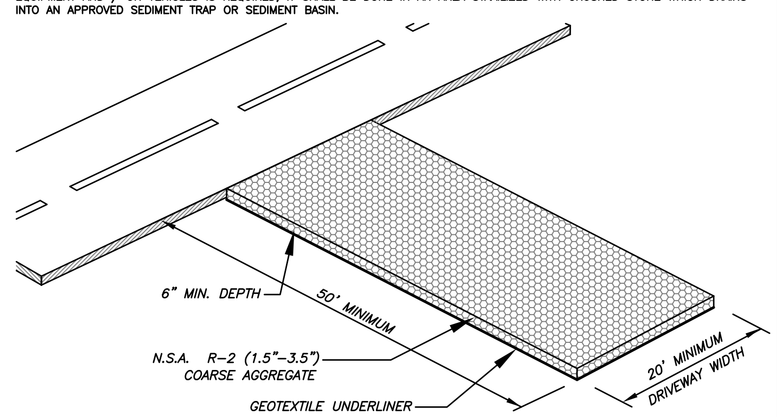

TEMPORARY CONSTRUCTION EXIT DETAIL (Co)

Cd

L= THE DISTANCE SUCH THAT POINTS A AND B ARE OF EQUAL ELEVATION

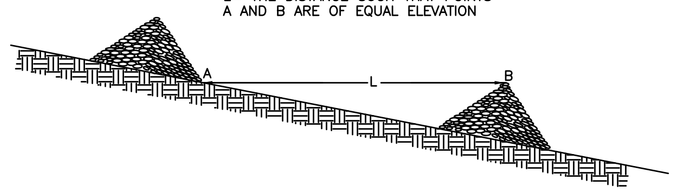

SPACING BETWEEN CHECK DAMS

STONE CHECK DAM

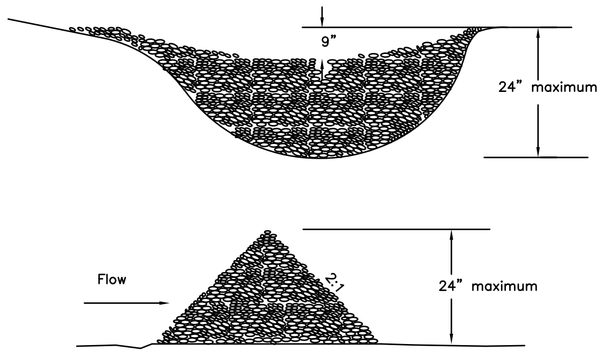

Ds1 MULCHING ONLY

MULCHING SHALL CONSIST OF MATERIALS SUCH AS WHEAT STRAW OR GRASS HAY, PINE NEEDLES, SAWDUST, BARK, CHIPS, OR SHREDDED RESIDUES (CROPS, LEAVES, ETC.)

MATERIALS	RATE
GRAIN STRAW OR GRASS HAY	4–6" DEEP OR 7 BALES/1000 SF
PINE NEEDLES	4–6" DEEP OR 7 BALES/1000 SF
WOOD CHIPS	4–6" DEEP
SHREDDED RESIDUE	4–6" DEEP

Ds2 TEMPORARY GRASSING

TEMPORARY GRASSING SHALL CONSIST OF SOWING A QUICK GRASS SUCH AS RYE, BROWN TOP MILLET, OR A GRASS SUITABLE TO THE AREA AND SEASON. LIME AND FERTILIZER WILL BE OMITTED. MULCH IS NOT REQUIRED BUT SHOULD BE USED AS DICTATED BY SITE CONDITIONS.

SPECIES	RATE	PLANTING DATES
RYE GRASS	40–50#/ACRE	AUGUST – JANUARY
BROWN MILLET	30–40#/ACRE	APRIL – JULY
RYE	130–140#/ACRE	FEBRUARY – MARCH

DO NOT USE RYE GRASS IN MIXTURES, USE RYE GRAIN. RYE GRASS SHOULD ONLY BE USED ALONE ON AREAS THAT WILL BE DISTRUBED AT A LATER DATE (FUTURE PAVING, FUTURE BUILDING, ETC.)

Ds3 PERMANENT GRASSING

PERMANENT GRASSING SHALL CONSIST OF GROUND PREPARATION, LIMING, FERTILIZATION, MULCHING, AND SEEDING. THE GROUND SHALL BE PREPARED BY PLOWING AND DISKING TO A DEPTH NOT LESS THAN 4". FERTILIZER AND LIME SHALL BE UNIFORMLY MIXED WITH INTO THE GROUND, FERTILIZER AT THE RATE OF 1500#/ACRE AND LIME AT THE RATE OF 2 TON/ACRE. THE GROUND SHALL BE FINISHED OFF SMOOTH AND UNIFORM AND BE FREE OF ROCKS, CLODS, ROOTS, AND WEEDS. FERTILIZER SHALL BE 4–12–12, 6–12–12, OR 5–10–15. WEATHER PERMITTING, SEEDING SHALL BE DONE WITHIN 24 HOURS OF FERTILIZER APPLICATION. SEED SHALL BE UNIFORMLY SPREAD AT AT THE RATES SHOWN BELOW. MULCHING IS REQUIRED AND SHALL BE DONE IMMEDIATELY AFTER SEEDING. MULCH SHALL BE UNIFORMLY APPLIED OVER THE AREA LEAVING APPROXIMATELY 25% OF THE GROUND SURFACE EXPOSED. THE RATE OF APPLICATION SHALL BE DOUBLED ON SLOPES STEEPER THAN 4:1.

SPECIES	RATE	PLANTING DATES
TALL FESCUE	50#/ACRE	SEPTEMBER – OCTOBER
LESPEDEZA	40#/ACRE	MARCH – JULY
BERMUDA, COMMON (HULLED SEED)	10#/ACRE	APRIL–MAY

USE EL INOCULANT ON LESPEDEZA SEED. FOR SPRING PLANTING OF LESPEDEZA, MAKE SURE THE SEED IS SCARIFIED.

TEMPORARY AND PERMANENT VEGETATION SHALL BE INSTALLED IN ACCORDANCE WITH THE REQUIREMENTS OF CHAPTER 6 OF "THE MANUAL FOR EROSION AND SEDIMENTATION CONTROL IN GEORGIA".

DISTURBED AREA STABILIZATION

Ds1 Ds2 Ds3 *DISTURBED AREA STABILIZATION*

1. *SILT FENCE SHALL CONSIST OF WATER PERMEABLE FILTER MATERIAL COMPOSED OF STRONG ROT PROOF SYNTHETIC FIBERS FORMED INTO A MATRIX OF WOVEN FABRIC. THE FABRIC SHALL BE A PERVIOUS SHEET OF SYNTHETIC FIBERS ORIENTED IN A STABLE NETWORK SUCH THAT THE FIBERS RETAIN THEIR RELATIVE POSITION WITH RESPECT TO EACH OTHER. THE FABRIC SHALL BE FREE OF ANY TREATMENT OR COATING WHICH COULD ALTER THE FABRIC'S ABILITY TO WITHSTAND EXPOSURE TO PROLONGED SUNLIGHT OR HEAT.*
2. *THE EDGES OF THE FABRIC SHALL BE FINISHED TO PREVENT THE OUTER STRAND FROM PULLING AWAY FROM THE MATERIAL. THE FABRIC SHALL BE FREE OF DEFECTS OR FLAWS WHICH SIGNIFICANTLY AFFECT IT'S STRENGTH OR FILTERING PROPERTIES.*
3. *THE FABRIC SHALL HAVE A MINIMUM HEIGHT OF 36".*
4. *SHEETS OF FABRIC MAY BE SEWN OR BONDED TOGETHER TO FORM CONTINUOUS PIECES. NO DEVIATION FROM ANY STANDARD OR SPECIFICATION WILL BE PERMITTED DUE TO THE PRESENCE OF A SEAM.*
5. *STEEL POSTS ONLY.*
6. *FASTENERS CAN BE EITHER APPROVED STAPLES OR BUTTON HEAD NAILS. WIRE STAPLES SHALL BE A MINIMUM OF 17 GAUGE AND SHALL HAVE A CROWN WIDTH OF NO LESS THAN THREE-QUARTERS OF AN INCH. STAPLES SHALL BE EVENLY SPACED WITH A MINIMUM APPLICATION RATE OF 5 STAPLES PER POST. NAILS SHALL BE A MINIMUM OF 14 GAUGE, 1 INCH IN LENGTH, AND HAVE A MINIMUM THREE-QUARTER INCH HEAD. NAILS SHALL BE EVENLY SPACED WITH A MINIMUM APPLICATION RATE OF 4 NAILS PER POST.*
7. *TEMPORARY SILT FENCE INSTALLATION SHALL CONFORM TO THE STANDARDS SET FORTH IN THE GEORGIA SOIL CONSERVATION'S SERVICE "MANUAL FOR EROSION & SEDIMENT CONTROL IN GEORGIA".*
8. *THE CONTRACTOR SHALL MAINTAIN THE SILT FENCE UNTIL THE LAND DISTURBING ACTIVITY IS COMPLETE AND FINAL STABILIZATION IS ACHIEVED. FILTER FABRIC SHALL REMOVED AND REPLACED WHENEVER IT HAS DETERIORATED OR OTHERWISE BEEN DAMAGED TO SUCH AN EXTENT THAT IT REDUCES THE EFFECTIVENESS OF THE SILT FENCE.*

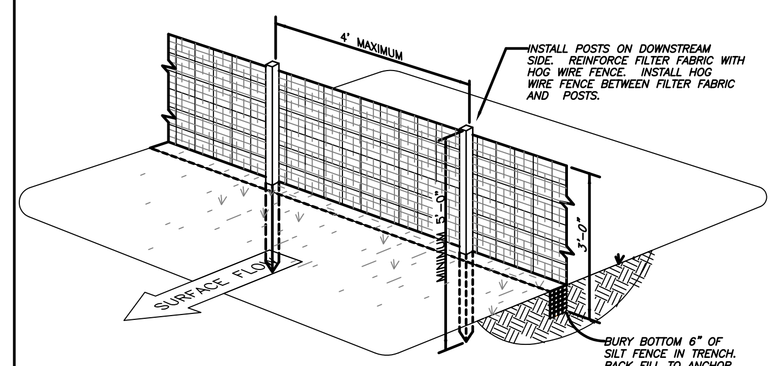

Sd1 *SEDIMENT BARRIER DETAIL*

TYPE C SILT FENCE

REVISIONS

No.	DATE	REMARKS
1.	2/15	REVISE ROUTE/ ADD UTILITIES
2.	4/25	PER COMMENTS

SEAL

GEORGIA REGISTERED No. 18702 PROFESSIONAL ENGINEER PAUL S. BOYER

THIS DRAWING, AS AN INSTRUMENT OF SERVICE, IS AND SHALL REMAIN THE PROPERTY OF THE ENGINEER AND SHALL NOT BE REPRODUCED, PUBLISHED, OR USED IN ANY WAY WITHOUT THE PERMISSION OF THE ENGINEER.

THE CONTRACTOR SHALL VERIFY ALL DIMENSIONS AND EXISTING CONDITIONS AT THE SITE BEFORE PROCEEDING WITH EACH PHASE OF THE WORK.

Patton - Boyer, Inc.
LAND SURVEYORS & CIVIL ENGINEERS
909 ATLANTA HWY. 30501
GAINESVILLE, GEORGIA
PHONE (770) 532 – 6492
FAX (770) 532 – 1995

EROSION DETAILS
FOR
WALTON POND PUMP STATION
LAND LOTS 156 & 184 ~ 4th LAND DISTRICT
CITY OF LOGANVILLE WALTON COUNTY, GEORGIA

SHEET NUMBER
C24 24
OF

SCALE: N.T.S.

DATE: 12/28/06

PROJECT NO.: 03–243.09

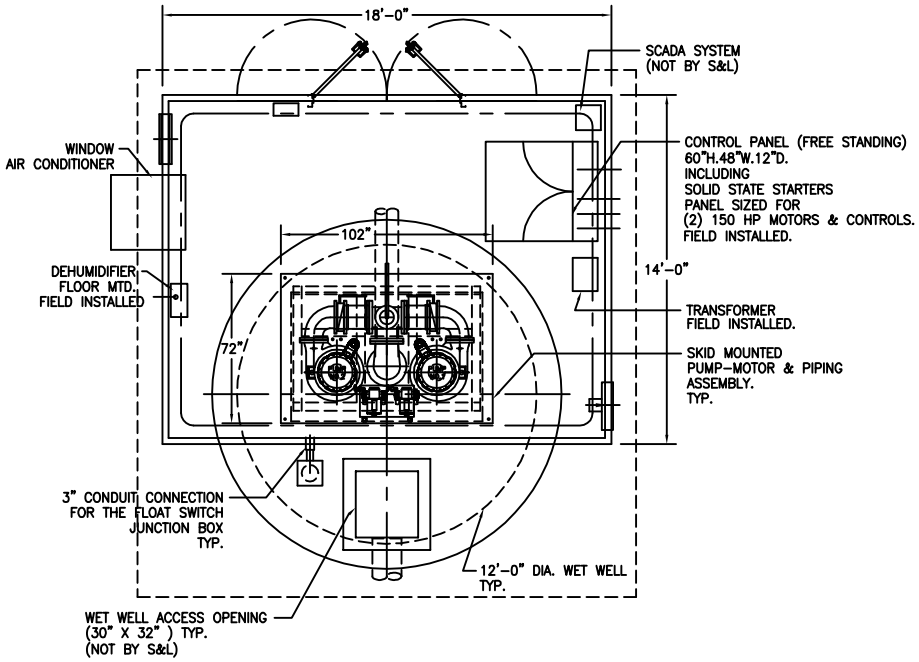

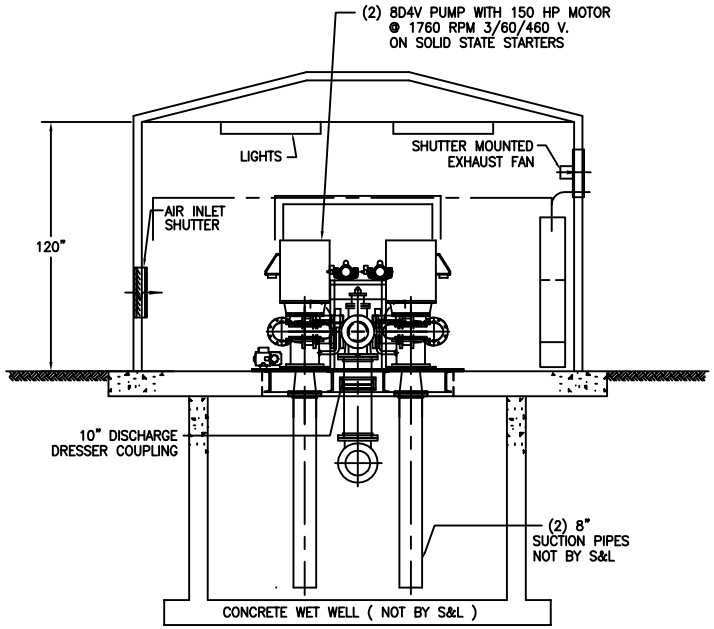

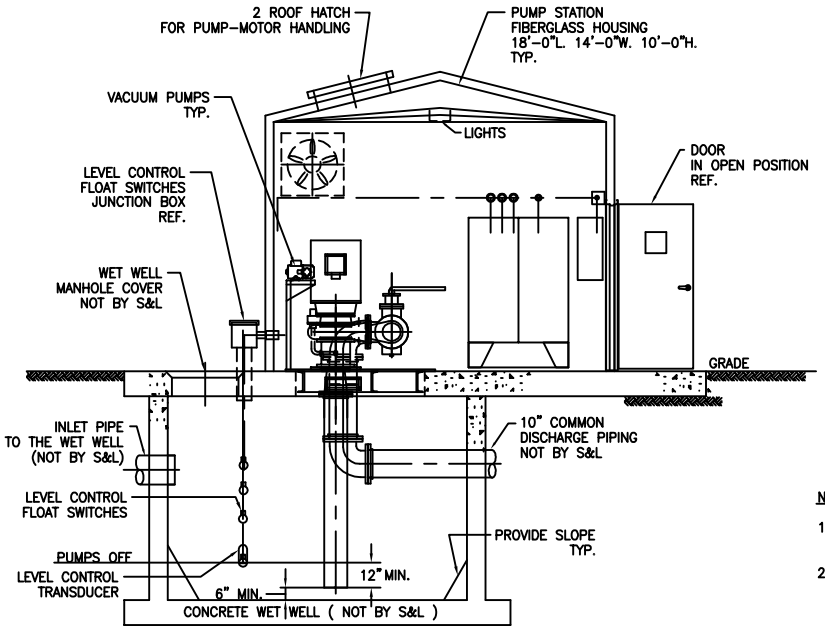

NOTES:

1. SEE ENGINEERS PLANS AND SPECIFICATIONS FOR DETAILS OF WET WELL, CONCRETE FOUNDATION AND ELECTRICAL SERVICE.
2. COPYRIGHT (c) 2007, SMITH & LOVELESS INC.

B0054702

				DRAWN BY: JYM	DATE: 12/21/2006	ALLOWABLE TOLERANCES	FOR LOGANVILLE, GA	
				CHECKED BY: ACM	DATE: 01/19/2007	FRACTIONS –	CAPSULAR® WET WELL MOUNTED P.S. (2) 8D4V PUMP; 10X10X10" PIPING	
				APPROVED BY: ACM	DATE: 01/19/2007	DECIMALS –		
A		02/20	JYM ACM	SCALE: NTS	CODE:	ANGLES –	SIZE	U/M EA WT.
LET	ECN NO	DATE	BY APPV'D				FILE NAME B0104092	PLOT SCALE 1=48.000
ORIGINAL ISSUE				© Smith & Loveless, Inc. 2007			SERIAL NO INQ10409	DWG NO A10409-2 REV A

SHEET 1 OF 1

THE DESIGN AND DETAIL OF THIS DRAWING IS THE PROPERTY OF SMITH & LOVELESS, INC. AND IS NOT TO BE USED EXCEPT IN CONNECTION WITH OUR WORK. DESIGN AND INVENTION RIGHTS ARE RESERVED. DIMENSIONS ARE IN INCHES UNLESS OTHERWISE NOTED.

Smith & Loveless, Inc.

INSTALLATION DETAILS

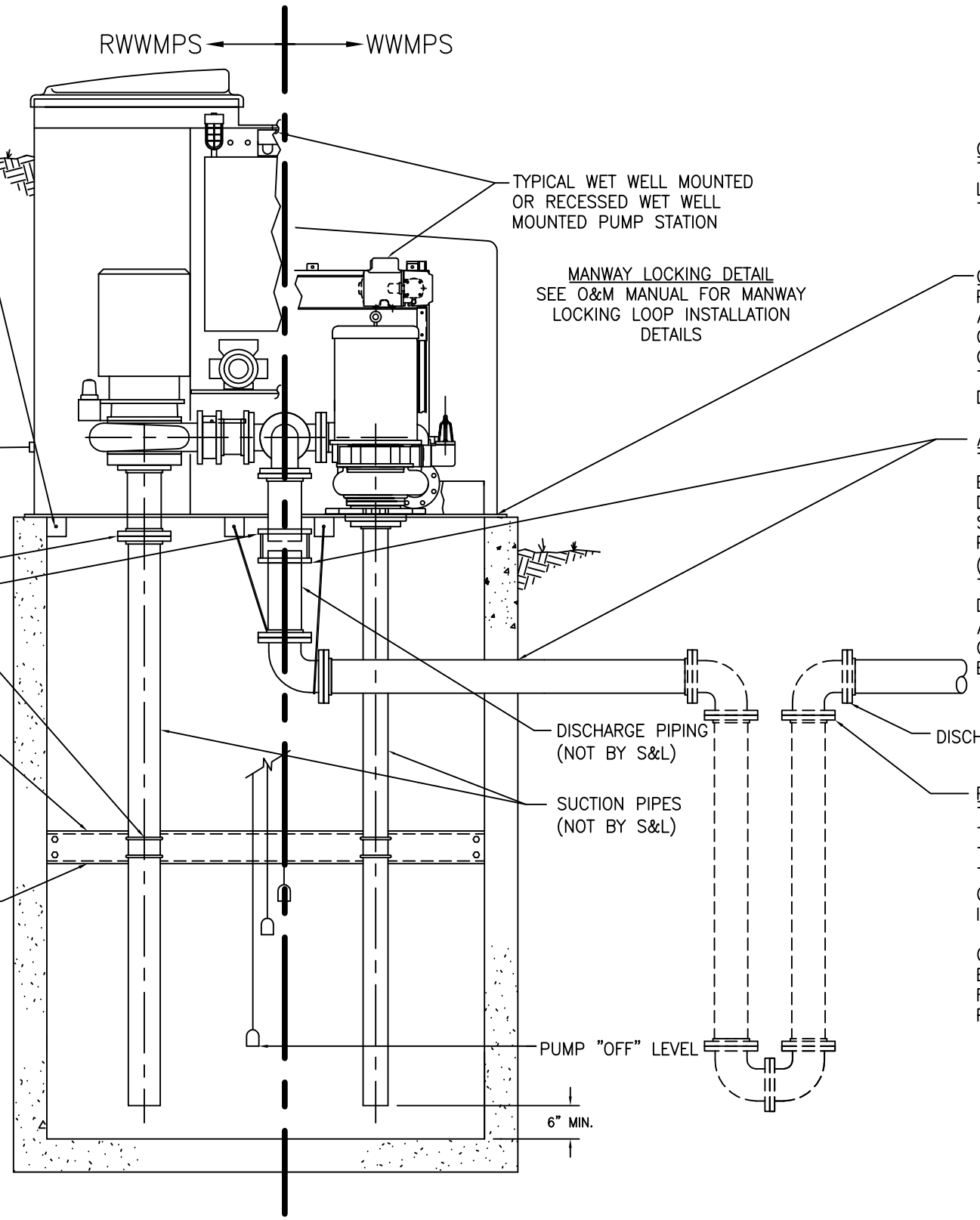

RWWMPS ANCHORING
SEE O&M MANUAL FOR ANCHORING DETAILS (4 PLACES)

RWWMPS ANODE PACKS
CONNECT WIRE TO LUG ON SHELL. INSTALL IN BACKFILL 5–10' FROM THE STATION AND AT LEAST 3' FROM THE BASE. SEE O&M MANUAL FOR DETAILS.

SUCTION PIPE CONNECTION
USE GASKETS AND SEALANT PROVIDED WITH STATION FOR BUBBLE TIGHT CONNECTION. SEE O&M MANUAL FOR DETAILS

DRESSER COUPLING CAST IRON PIPE FITTING (BY S&L)

U–BOLTS (2) PER SUCTION PIPE (NOT BY S&L)

6" SUPPORT CHANNEL ANCHORED TO WET WELL (NOT BY S&L)

SUCTION PIPE SUPPORTS
SMITH & LOVELESS RECOMMENDS SCHEDULE 80 PVC AS THE PREFERRED MATERIAL FOR SUCTION PIPES WITH LENGTHS OVER 10 FT. SCHEDULE 40 PVC IS NOT ADEQUATE AND MAY RESULT IN VACUUM LEAKS DUE TO DISTORTION OF THE MATERIAL. FOR PVC PIPE LENGTHS OF 15 FT. OR LONGER, AN INTERMEDIATE SUPPORT AT ONE–HALF THE DEPTH IS RECOMMENDED. STEEL, CAST IRON AND DUCTILE IRON SUCTION PIPES ARE NOT RECOMMENDED FOR LENGTHS IN EXCESS OF 10 FEET. IF THEY ARE REQUIRED, THE PIPE SHOULD BE SUPPORTED FROM THE WALL OF THE WET–WELL TO MINIMIZE THE STRAIN ON THE STATION PIPING.

TYPICAL WET WELL MOUNTED OR RECESSED WET WELL MOUNTED PUMP STATION

MANWAY LOCKING DETAIL
SEE O&M MANUAL FOR MANWAY LOCKING LOOP INSTALLATION DETAILS

GENERAL WETWELL COMMENTS
THE WETWELL SHOULD BE INSTALLED SO THE TOP REMAINS AS LEVEL AS POSSIBLE. CONTRACTOR IS TO INSTALL SLOPES AROUND THE INTERIOR BOTTOM CORNER OF THE WETWELL.

GROUTING STATION TO WET WELL
PRIOR TO SETTING THE STATION ON TOP OF THE WET WELL, APPLY A LAYER OF NON–SHRINK OR EPOXY GROUT ON THE TOP SURFACE OF THE WET WELL. THE STATION WILL THEN BED DOWN IN THE GROUT, GIVING THE STATION FIRM SUPPORT AND REDUCING NOISE TRANSMISSIONS. THE BASE PLATE SHOULD BE LEVEL IN ALL DIRECTIONS WHEN COMPLETE.

ANCHORING DISCHARGE CONNECTION
THE DISCHARGE IS TO BE ORIENTED IN ACCORDANCE WITH THE ENGINEER'S PLAN. GENERALLY, SMITH & LOVELESS WILL PROVIDE A DRESSER TYPE COUPLING TO JOIN THE FORCE MAIN TO THE STATION DISCHARGE PIPE. DRESSER TYPE COUPLINGS DO NOT PROVIDE PIPE END RESTRAINT. TWO LUGS ARE ALSO PROVIDED (ONE ON EITHER SIDE OF THE DISCHARGE) ON THE UNDERSIDE OF THE BASEPLATE FOR SECURING THE DISCHARGE. TIE THE DISCHARGE PIPE TO THE STATION TO PREVENT SEPARATION. AN ALL–THREADED ROD, CABLE OR CHAIN (NOT SUPPLIED BY S&L) CAN BE USED FOR THIS PURPOSE. ALL DISCHARGE PIPES SHOULD BE SECURED.

DISCHARGE PIPING (NOT BY S&L)

PRIMING LOCK LOOP(IF REQUIRED DUE TO DOWNHILL OR SHORT FORCE MAIN)
THE PURPOSE OF THE PRIMING LOCK LOOP IS TO FORM A RETURN LOOP OR TRAP IN THE FORCE MAIN, EITHER INSIDE OR JUST OUTSIDE THE WET WELL. THE LOOP MUST BE BELOW THE LOW LEVEL OFF ELEVATION, THIS PREVENTS THE ENTIRE CONTENTS OF A SHORT FORCE MAIN FROM RETURNING BY GRAVITY TO THE WET WELL OR BEING SIPHONED BACK INTO THE WET WELL IF THE CHECK VALVE DOES NOT SEAT.

ON FORCE MAINS THAT RUN HORIZONTAL OR DOWN HILL FROM THE STATION. EITHER USE THE PRIME LOCKING LOOP OR THE LAST FEW FEET OF THE FORCE MAIN SHOULD RUN UP HILL TO CREATE A WATER TRAP EFFECT TO PREVENT WATER DRAINING THE FORCE MAIN IN THE FORWARD DIRECTION.

NOTE:
1. COPYRIGHT (c)2006 SMITH & LOVELESS, INC.

87B650

SHEET 1 OF 1

LET	ECN NO	DATE	BY APPV'D	DRAWN BY: CAJON	DATE: 12/20/2006	ALLOWABLE TOLERANCES
				CHECKED BY: FT	DATE: 2/1/2007	FRACTIONS –
				APPROVED BY: CGM	DATE: 2/1/2007	DECIMALS –
				SCALE: NTS	CODE:	ANGLES –

FOR: INSTALLATION DETAILS VACUUM PRIME STATIONS

SIZE | U/M EA | WT.

FILE NAME \SALES\87B650_ | PLOT SCALE 1=30

ORIGINAL ISSUE N2007–9

© Smith & Loveless, Inc. 2006

SERIAL NO | DWG NO 87B650 | REV

THE DESIGN AND DETAIL OF THIS DRAWING IS THE PROPERTY OF SMITH & LOVELESS, INC. AND IS NOT TO BE USED EXCEPT IN CONNECTION WITH OUR WORK. DESIGN AND INVENTION RIGHTS ARE RESERVED. DIMENSIONS ARE IN INCHES UNLESS OTHERWISE NOTED.

Smith & Loveless, Inc.

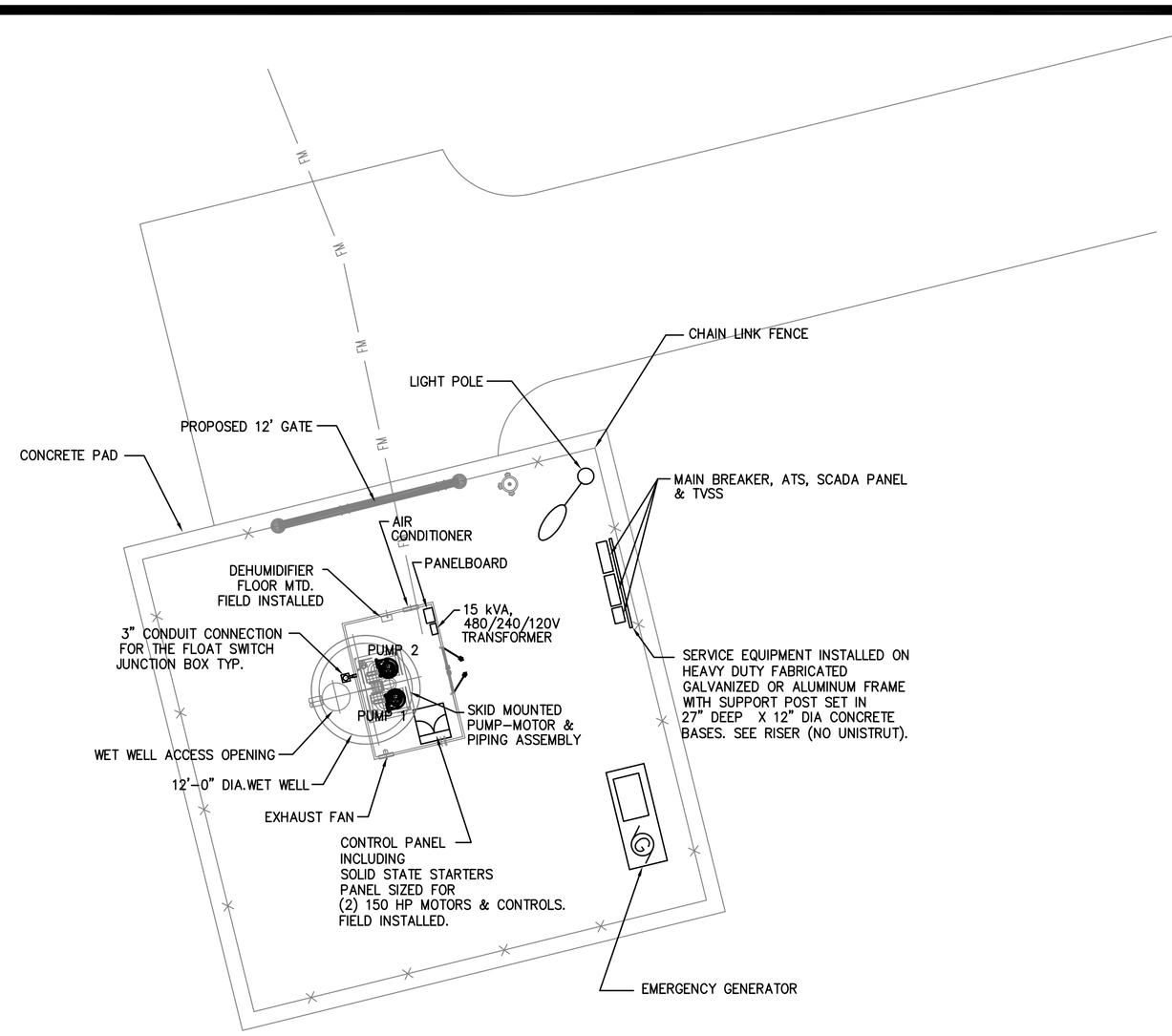

SITE PLAN

N.T.S

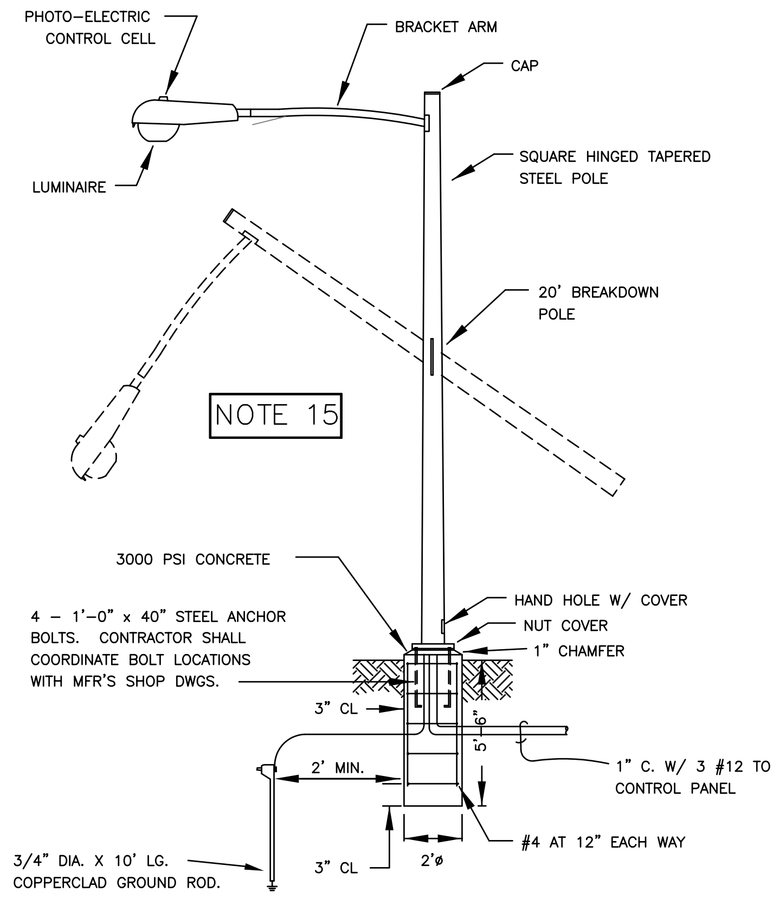

SECURITY LIGHT POLE DETAIL

N.T.S.

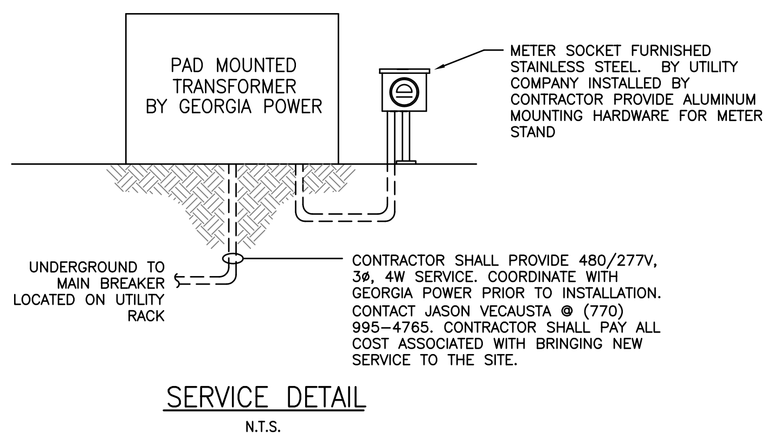

SERVICE DETAIL

N.T.S.

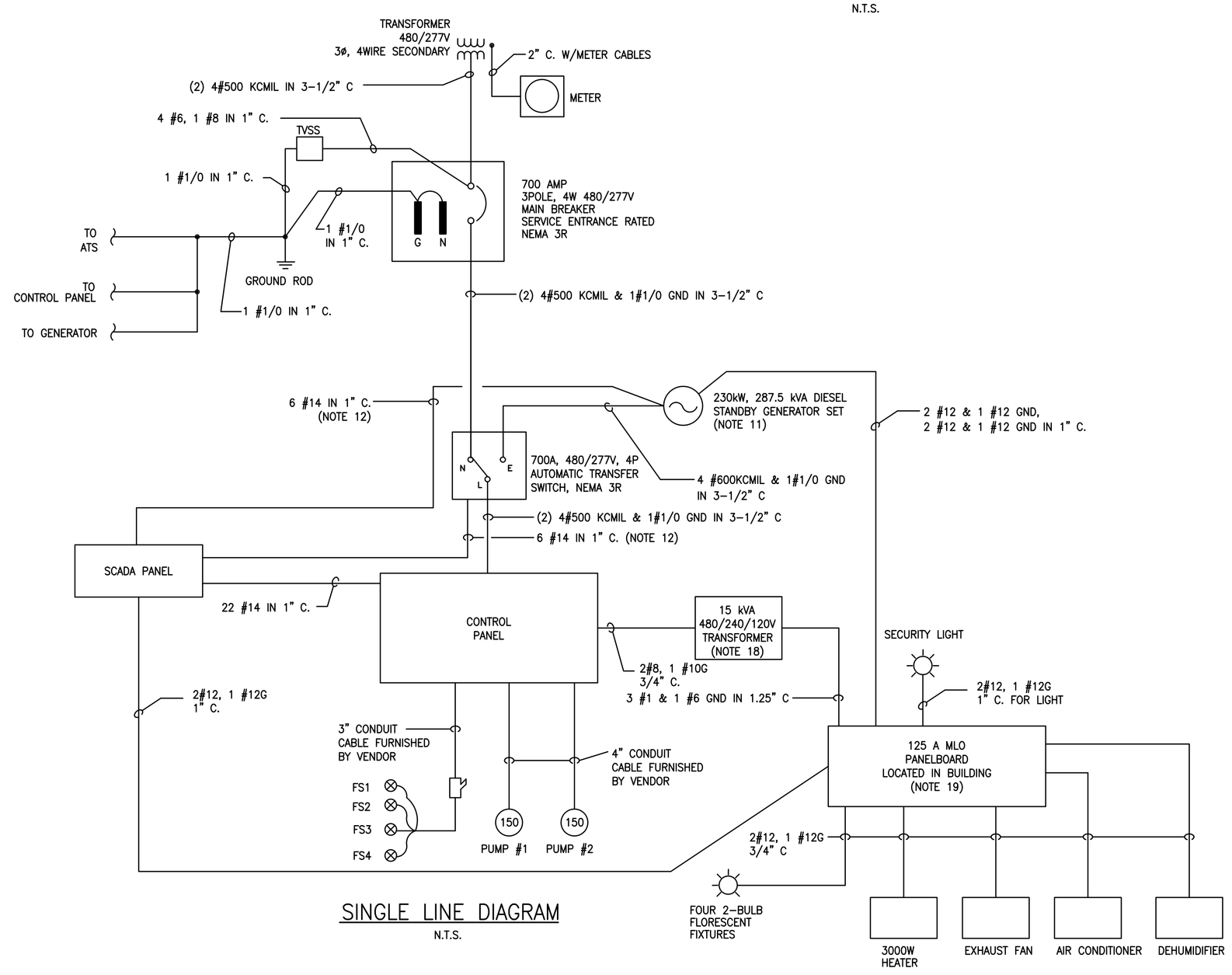

SINGLE LINE DIAGRAM

N.T.S.

GENERAL NOTES:

1. ALL EXPOSED CONDUIT SHALL BE RIGID GALVANIZED STEEL, MINIMUM OF 3/4". ALL BURIED CONDUIT SHALL BE PVC-40, MINIMUM OF 1".

2. ALL FITTINGS SHALL BE CAST WITH THREADED HUBS. ALL CONNECTIONS SHALL BE COMPRESSION TYPE.

3. THE ELECTRICAL INSTALLATION SHALL COMPLY WITH THE LATEST EDITION OF THE NATIONAL ELECTRICAL CODE AND ALL STATE AND LOCAL CODES, AND SHALL CONFORM TO THE REQUIREMENTS OF THE CITY OF LOGANVILLE. THE CONTRACTOR SHALL OBTAIN AND PAY FOR ALL PERMITS AND/OR INSPECTIONS AS REQUIRED BY ANY GOVERNING BODY.

4. ALL WIRING SHALL BE STRANDED COPPER CONDUCTOR WITH 600 VOLT TYPE THWN-2 INSULATION.

5. THE CONTRACTOR SHALL ARRANGE WITH THE LOCAL UTILITY COMPANY FOR SERVICE TO THE SITE. SERVICE SHALL BE 480/277V, 3ø, 4W. THE CONTRACTOR SHALL PAY ALL COSTS ASSOCIATED WITH BRINGING THREE PHASE POWER TO THE SITE.

6. THE CONTRACTOR SHALL PROVIDE AND PERMANENTLY INSTALL ON THE MAIN BREAKER A RED ON WHITE PHENOLIC WARNING TAG WITH MINIMUM 1/2" HIGH LETTERS:

> **WARNING**
> 480/277V, 3ø, 4W
> LOCK OUT ALL POWER WHILE WORKING ON ANY EQUIPMENT TO AVOID ELECTRICAL SHOCK OR EQUIPMENT ACTIVATION
> -- DO NOT SWITCH UNDER LOAD --

7. THE GENERAL CONTRACTOR SHALL FURNISH AND INSTALL THE PACKAGE PUMP STATION PANEL WITH NEMA 4X ENCLOSURE WHICH INCLUDES A DUPLEX PUMP CONTROLLER WITH ALL NECESSARY CONTROLS INCLUDING, BUT NOT LIMITED TO THE FOLLOWING:
   - A. HOA SWITCHES
   - B. ELAPSED TIME METERS
   - C. CONTROL POWER TRANSFORMERS
   - D. STRIP HEATER & THERMOSTAT
   - E. NEMA 4X HORN
   - F. NEMA 4X LIGHT
   - G. TWO - RVSS NEMA SIZE 5, 480V, 3P, 150HP STARTERS
   - H. ALTERNATOR
   - J. LIGHTNING ARRESTOR
   - K. THREE PHASE POWER MONITOR
   - L. LEVEL FLOAT SWITCHES & INTRINSIC SAFE BARRIER.

   THE CONTRACTOR SHALL GROUND CONTROL PANEL TO THE GROUND ROD.

8. SPARE PARTS:
   FUSES - 3 EACH SIZE/TYPE
   CONTROL TRANSFORMERS - 1 EACH SIZE/TYPE

9. THE CONTRACTOR SHALL SET THE WIDTH OF THE UTILITY RACK SECTION AS REQUIRED TO ACCOMMODATE THE EQUIPMENT. THE CONTRACTOR SHALL ENSURE A MINIMUM CLEARANCE OF 6" ON THE SIDES OF THE EQUIPMENT. THE UNISTRUTS SHALL BE LOCATED CLOSE ENOUGH SO THAT ALL EQUIPMENT CAN ATTACH TO TWO UNISTRUTS. ALL MATERIALS SHALL BE ALUMINUM OR STAINLESS STEEL.

10. SECURITY LIGHT TO BE 10'-0" FROM BACK FENCE AND 2'-0" FROM SIDE FENCE BREAKING DOWN TOWARDS FRONT GATE WITH LIGHT POINTING TOWARD PUMP STATION.

11. CONTRACTOR SHALL FURNISH AND INSTALL A COMPLETE DIESEL GENERATOR SET INCLUDING; GENERATOR, AUTOMATIC TRANSFER SWITCH, 24HR DIESEL TANK (100 GALLON MINIMUM), AND GENERATOR PAD. GENERATOR SHALL INCLUDE A WEATHER PROTECTIVE AND SOUND ATTENUATED ENCLOSURE AND A 400A LOAD SIDE BREAKER. GENERATOR SHALL BE CUMMINS 230DFAB OR EQUAL. GENERATOR SIZE IS BASED ON RUNNING ONE 150 HP MOTOR ON RVSS STARTER WITH MAX 400% LOCKED ROTOR CURRENT.

12. THE CONTROL PANEL SHALL MONITOR THE GENERATOR STATUS AND ATS STATUS SUCH THAT A FAULT IS TRANSMITTED VIA THE FUTURE CELLULERT.

13. GROUND ROD SHALL BE 3/4"X10' COPPER-CLAD STEEL ROD.

14. TVSS SHALL BE BY LIEBERT, CURRENT TECHNOLOGIES, OR UNITED POWER AND SHALL INCLUDE A DISCONNECT AND NEMA 4X ENCLOSURE. SURGE CURRENT RATINGS SHALL BE 100KA PER MODE, 200KA PER PHASE, AND SHALL BE DUTY CYCLE TESTED TO SURVIVE 20KV, 10KA, IEEE C62.41 CATEGORY SURGE CURRENT WITH LESS THAN 5% DEGRADATION OF CLAMPING VOLTAGE. THE SURGE SUPPRESSER SHALL HAVE MINIMUM SURGE CAPACITY OF 2500 IMPULSES PER MODE AND 5000 IMPULSES PER PHASE. SUPPRESSER SHALL INCLUDE INDICATING LIGHTS AND A FORM C DRY ALARM CONTACT.

15. HINGED LIGHT POLE WITH 150W HIGH PRESSURE SODIUM LUMINARIES, 120V BALLAST, PHOTO-ELECTRIC CONTROL, WITH HEAT AND IMPACT RESISTANT LENS. POLE IS TO BE BROWN AND IS TO BE SUPPLIED WITH LOWERING WINCH. LUMINARIES GE CAT#M2RR-15S1A2L-MN4, BRACKET GE CAT. #RBSU2H6PP, AND POLE GE CAT. #ASHTS202T-5.3-11PP.

16. NO CONDUIT RUNS OR JUNCTION BOXES ARE TO BE INSTALLED INSIDE OR ON TOP OF THE WET WELL.

17. PROVIDE UNIT HEATER & DEHUMIDIFIER IN THE CONTROL BUILDING. PROVIDE LIGHTS, RECEPTACLES AND ALL POWER NECESSARY IN THE CONTROL BUILDING. ALL PUMPS, SUMP PUMP, VACUUM PUMPS SHALL BE PREWIRED TO THE CONTROL PANEL.

18. CONTRATOR SHALL SUPPLY AND INSTALL 15 kVA, 480/240/120V TRANSFORMER. TRANSFORMER SHALL BE INSTALLED IN THE BUILDING.

19. CONTRACTOR SHALL PROVIDE A 125A MLO PANELBOARD WITH 8 - 20A, 1P BREAKERS, AND 2 - 20A, 2P CIRCUIT BREAKERS.

UTILITIES PROTECTION CENTER, INC.

Call FREE
THROUGHOUT GEORGIA
1 - 800 - 282 - 7411
IN ATLANTA: 325 - 5000

THREE WORKING DAYS BEFORE YOU DIG ITS THE LAW

REVISIONS

No.	DATE	REMARKS
1.	2/15	REVISE ROUTE/ ADD UTILITIES

SEAL

THIS DRAWING, AS AN INSTRUMENT OF SERVICE, IS AND SHALL REMAIN THE PROPERTY OF THE ENGINEER AND SHALL NOT BE REPRODUCED, PUBLISHED, OR USED IN ANY WAY WITHOUT THE PERMISSION OF THE ENGINEER.

THE CONTRACTOR SHALL VERIFY ALL DIMENSIONS AND EXISTING CONDITIONS AT THE SITE BEFORE PROCEEDING WITH EACH PHASE OF THE WORK.

Patton - Boyer, Inc.
LAND SURVEYORS & CIVIL ENGINEERS
909 ATLANTA HWY.
GAINESVILLE, GEORGIA 30501
PHONE (770) 532 - 6492
FAX (770) 532 - 1995

PUMP STATION DETAILS
FOR
WALTON POND PUMP STATION
LAND LOTS 156 & 184 ~ 4th LAND DISTRICT
CITY OF LOGANVILLE ~ WALTON COUNTY, GEORGIA

SHEET NUMBER
E1 2
OF

SCALE
N.T.S.

DATE
12/28/06

PROJECT NO.
03-243.09

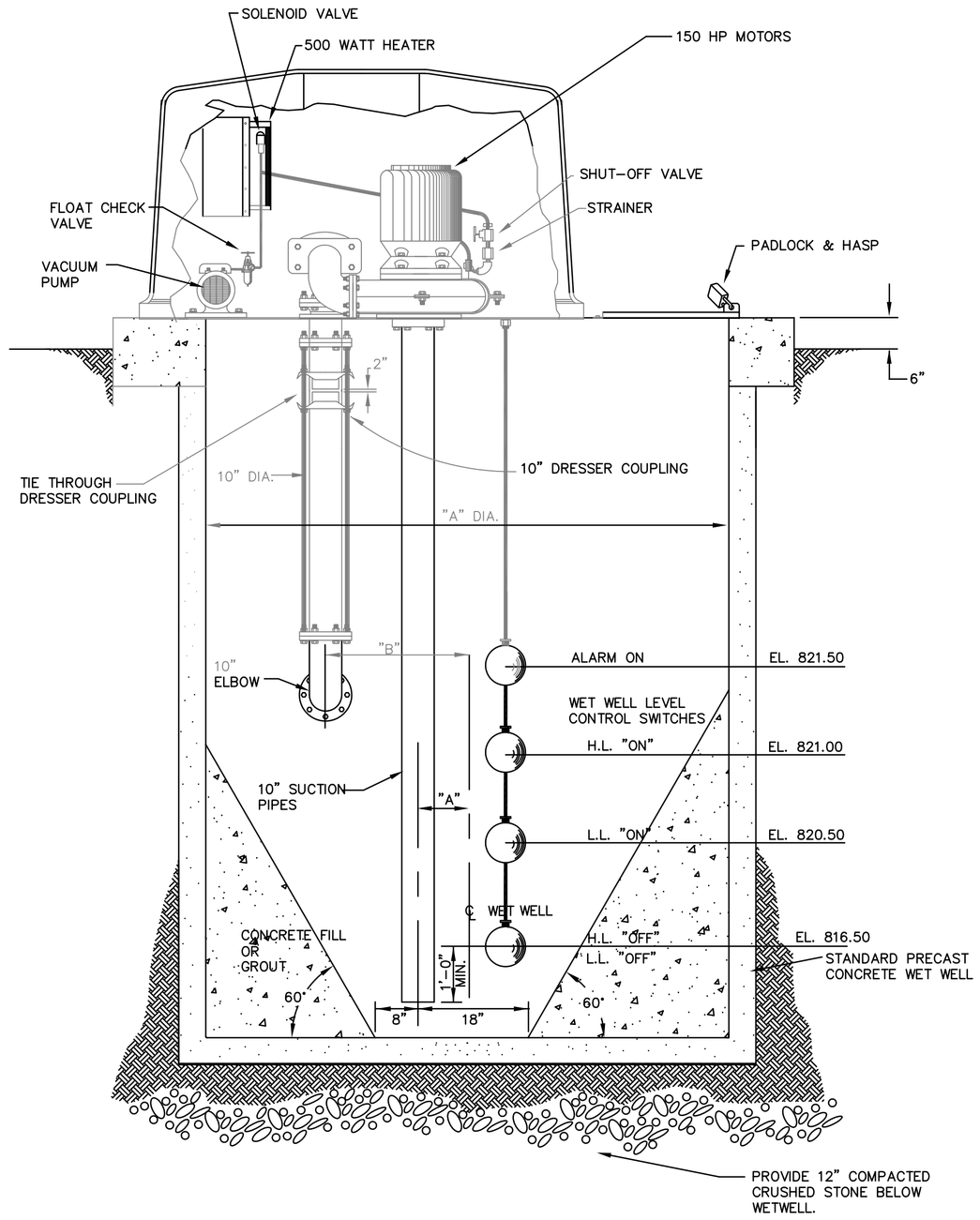

SECTION ELEVATION

N.T.S

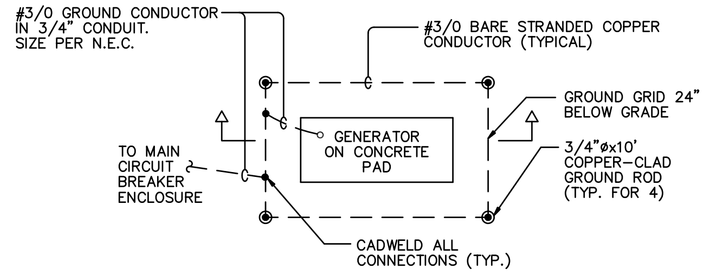

GROUNDING DETAIL

N.T.S

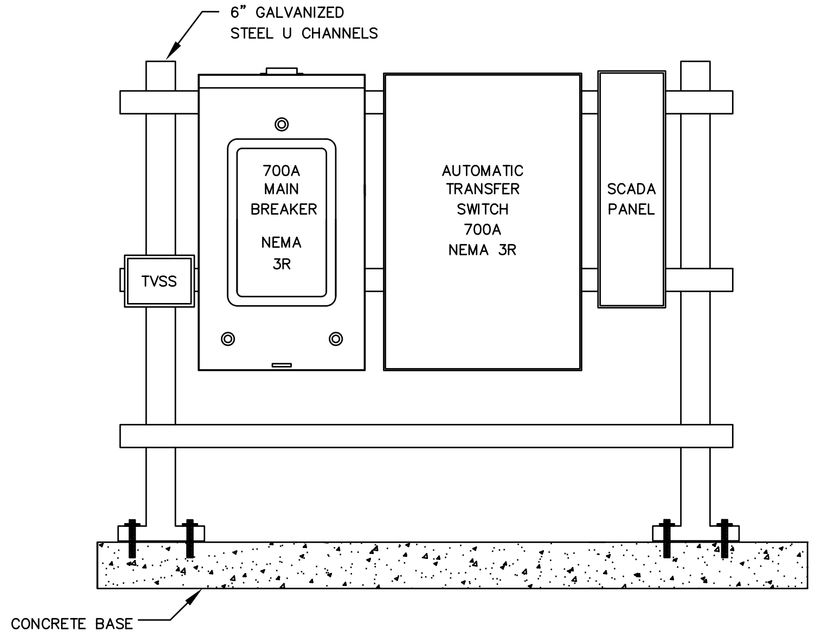

UTILITY RACK

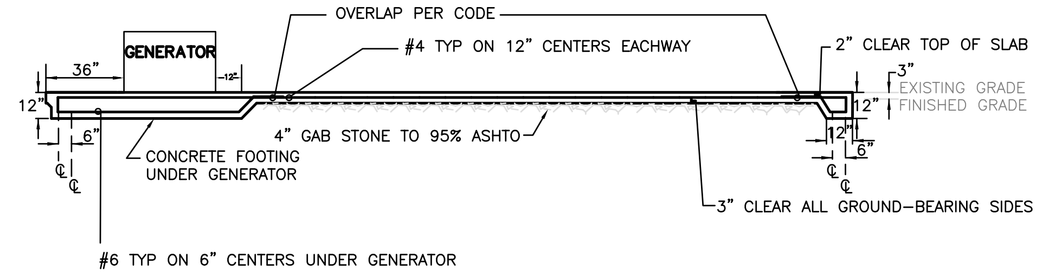

31' BY 31' CONCRETE PAD – 4,000 PSI CONCRETE

REVISIONS

No.	DATE	REMARKS

SEAL

THIS DRAWING, AS AN INSTRUMENT OF SERVICE, IS AND SHALL REMAIN THE PROPERTY OF THE ENGINEER AND SHALL NOT BE REPRODUCED, PUBLISHED, OR USED IN ANY WAY WITHOUT THE PERMISSION OF THE ENGINEER.

THE CONTRACTOR SHALL VERIFY ALL DIMENSIONS AND EXISTING CONDITIONS AT THE SITE BEFORE PROCEEDING WITH EACH PHASE OF THE WORK.

Patton - Boyer, Inc.
LAND SURVEYORS & CIVIL ENGINEERS
909 ATLANTA HWY 30501
GAINESVILLE, GEORGIA
PHONE (770) 532 - 6492
FAX (770) 532 - 1995

PUMP STATION DETAILS FOR
WALTON POND PUMP STATION
LAND LOTS 156 & 184 ~ 4th LAND DISTRICT
CITY OF LOGANVILLE WALTON COUNTY, GEORGIA

SHEET NUMBER
E2 OF 2

SCALE
N.T.S.

DATE
01/30/07

PROJECT NO.
03-243.09

GROUP
Ray Group Consulting Engineers, Inc.
1827 Powers Ferry Road
Building 20, Suite 100
Atlanta, Georgia 30339
Tel (770) 953-1443
Fax (770) 953-9533